STATE OF ALASKA

DEPARTMENT OF TRANSPORTATION AND PUBLIC FACILITIES

REVISIONS		
NO.	DATE	DESCRIPTION

STATE	PROJECT DESIGNATION	YEAR	SHEET NO.	TOTAL 'A' SHEETS
ALASKA	Z686630000	2016	A1	A3
			PLAN SET TOTAL	55

CDS ROUTE: 291345	MILEPOINT: 0.17 TO 1.40
CDS ROUTE: 291346	MILEPOINT: 0.00 TO 0.17
LATITUDE: 55°18'04"N	LONGITUDE: 131°31'55"W

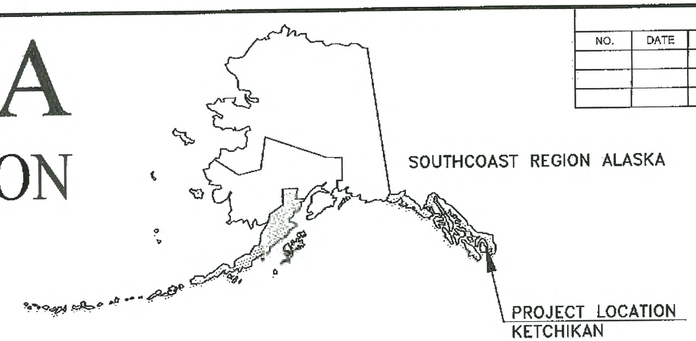

PROPOSED HIGHWAY PROJECT

KTN: ROOSEVELT DRIVE & FRANKLIN ROAD PAVEMENT REHABILITATION PROJECT NO. Z686630000~0003193

May 10, 2017

The undersigned hereby certifies that this duplicated document is an exact and true copy of the original.

Cody Salmon

ASBUILT'S
Heidi Fredrickson
Project Engineer
for Randall Johnston

VICINITY MAP

PROJECT SUMMARY	
WIDTH OF PAVEMENT	18-24 FT
LENGTH OF PAVING	1.4 MILES
LENGTH OF PROJECT	1.4 MILES

DESIGN DESIGNATIONS		
	FRANKLIN RD	ROOSEVELT DR
PROJECT TYPE	PM	PM
PRESENT A.D.T. (2013)	680	110
DESIGN YEAR A.D.T. (2037)	760	120
PEAK SEASONAL A.D.T. (2013)		
PERCENT COMMERCIAL TRUCKS	7.7%	7.7%
DIRECTIONAL DISTRIBUTION	55/45	55/45
DESIGN SPEED	15-25 M.P.H.	15-25 M.P.H.
PAVEMENT DESIGN YEAR	2037	2037
DESIGN VEHICLE	WB-40	WB-40
FUNCTIONAL CLASSIFICATION	MINOR COLLECTOR	LOCAL COLLECTOR

USE THESE PLANS IN CONJUNCTION WITH THE STATE OF ALASKA STANDARD SPECIFICATIONS FOR HIGHWAY CONSTRUCTION, 2015 EDITION AND THE PROJECT SPECIAL PROVISIONS.

THE FOLLOWING STANDARD DRAWINGS APPLY TO THIS PROJECT:

C-04.12	D-01.02	G-13.00	M-20.13	S-00.11
	D-04.21	G-20.11	M-23.12	S-01.00
	D-20.03	G-00.02		S-05.01
	D-22.01	G-04.10S		S-20.10
	D-35.00	G-10.01		
		G-20.11		
		G-28.00		

STATE OF ALASKA
DEPARTMENT OF TRANSPORTATION & PUBLIC FACILITIES
6860 GLACIER HIGHWAY, JUNEAU, AK 99811
(907)465-1763

APPROVED: 8-17-16
REGIONAL PRECONSTRUCTION ENGINEER — DATE

CONCUR: FOR MJC 8-17-16
SOUTHCOAST REGIONAL DIRECTOR — DATE

FILE Q:\Ktn\68663\EN\Dwgs\Sheets\68663_A1_TITLE SHEET.dwg | DATE 8/17/2016 13:18 | LAYOUT A1 | DESIGNED DD | CHECKED JB, LC | DRAFTED JT

NO.	DATE	REVISION

STATE	PROJECT DESIGNATION	YEAR	SHEET NO.	TOTAL SHEETS
ALASKA	Z686630000	2016	A2	55

HME 3.18.20

SHEET INDEX

SHEET NUMBER	DESCRIPTION
A1	TITLE SHEET
A2	LAYOUT
A3	LEGEND
A4–A8	SURVEY CONTROL
B1	TYPICAL SECTIONS
C1	ESTIMATE OF QUANTITIES
D1–D3	SUMMARIES
E1–E4	MISC–DETAILS
F1–F15	PLAN & PROFILE
G1–G3	INTERSECTION LAYOUT PLAN
H1–H9	STRIPING
P1–P9	ESCP PLAN
T1–T2	TRAFFIC CONTROL

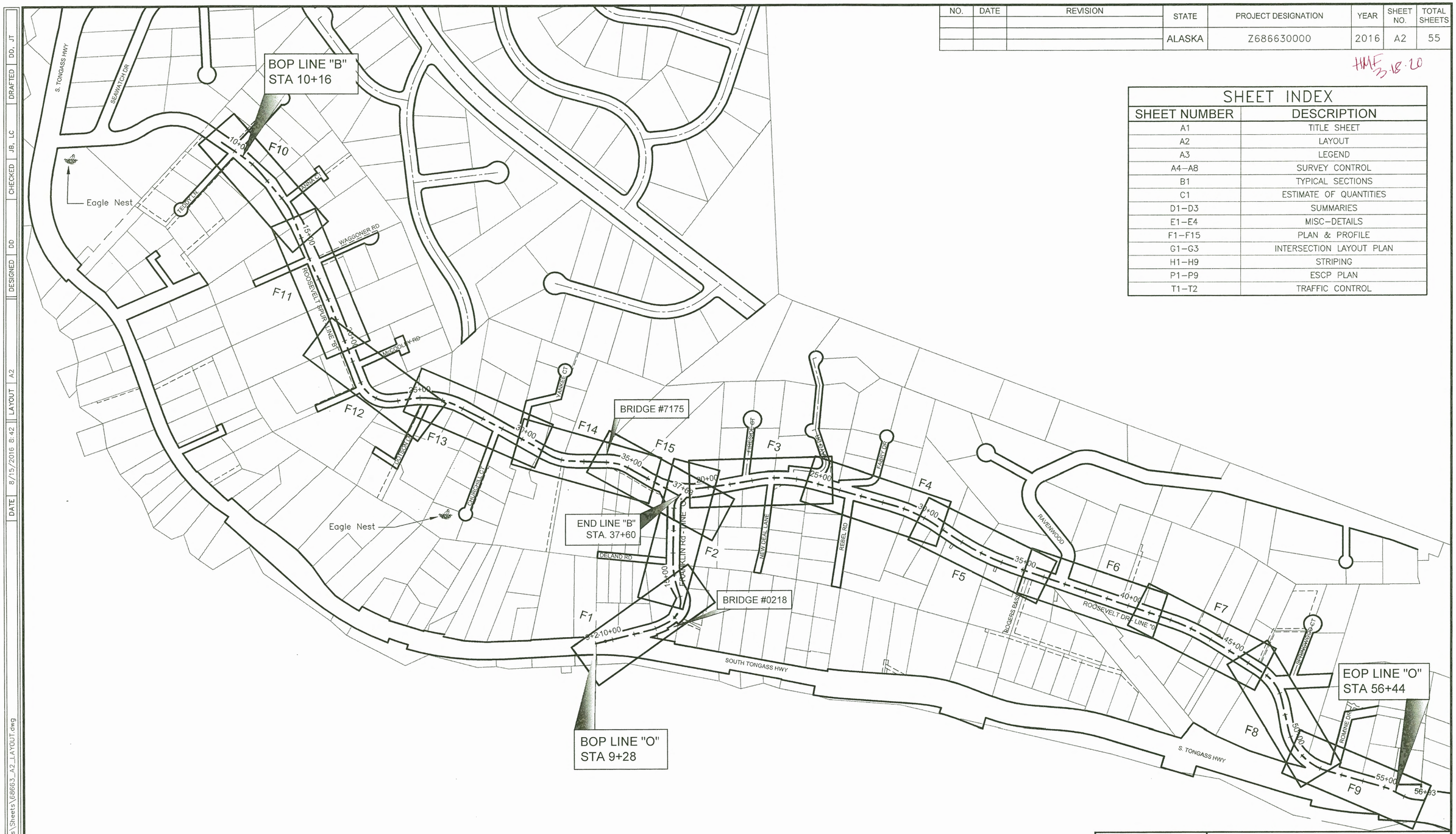

STATE OF ALASKA 49TH
James Brown
14083
REGISTERED PROFESSIONAL ENGINEER

STATE OF ALASKA DEPARTMENT OF TRANSPORTATION AND PUBLIC FACILITIES
6860 GLACIER HIGHWAY, JUNEAU, AK 99811
(907)465–1763

KTN ROOSEVELT DRIVE & FRANKLIN ROAD PAVEMENT REHABILITATION

LAYOUT

FILE	Q:\Ktn\68663\EN\Dwgs\Sheets\68663_A2_LAYOUT.dwg	DATE	8/15/2016 8:42	LAYOUT	A2	DESIGNED	DD	CHECKED	JB, LC	DRAFTED	DD, JT

NO.	DATE	REVISION	STATE	PROJECT DESIGNATION	YEAR	SHEET NO.	TOTAL SHEETS
			ALASKA	Z686630000	2016	A3	55

HMF 3-18-20

	EXISTING	PROPOSED
SANITARY SEWER (FLOW DIRECTION →)	SS	SS
FUEL LINE	O	O
GAS LINE	G	G
WATER LINE	W	W
METER, VALVE, FIRE HYDRANT	W	W
EXISTING STORM DRAIN (FLOW DIRECTION →)	SD	
PROPOSED STORM DRAIN	S-10, S-11, P-11, P-10, SD, MH	
FIBER OPTIC LINE	FO	
DIRECT BURIAL TELEPHONE CABLE	T	T
DIRECT BURIAL ELECTRIC CABLE	UGE	
ELECTRIC LINE (OVERHEAD)	OHE	
POWER POLE LINE		
JOINT USE POWER & TELEPHONE		
TELEPHONE POLE LINE		
POLE ANCHOR		
STUB POLE (POWER OR TELEPHONE)		
TELEPHONE DUCT	T	T
TELEPHONE PEDESTAL		
BURIED CABLE MARKER		
PIPELINE MARKER OR VALVE		
CATCH BASIN OR DROP INLET		
MANHOLE	MH	MH
SANITARY SEWER CLEAN OUT		
PIPE CULVERT		P-10
RIPRAP		

	EXISTING	PROPOSED
ROADWAY/PAVEMENT EDGE		
FENCE	X	X
CURB AND GUTTER		
DETECTABLE WARNINGS		
GUARDRAIL		
SIGN		
MAILBOX	MB	MB
RAILROAD TRACKS		
RAILROAD DEVICES	CROSS-BUCK, FLASHING LIGHT	CANTILEVER, SWITCH
TREE LINE		
WATER BOUNDARY		
ORDINARY HIGH WATER LINE		
FLOW CENTERLINE		
FLOW DIRECTION		
WETLANDS		
EXISTING BUILDINGS	H	
POST OR BOLLARD		
WELL OR MONITORING WELL	W, WM	
SEPTIC PIPE	S	
FUEL TANK FILL PIPE/VENT	P	
SATELLITE DISH	SAT. DISH	
TEST HOLE	TH	
CONIFER TREE		
DECIDUOUS TREE		
GRAVE		
THERMOSIPHON		
PARKING METER		
VEHICLE PLUG-IN		
DELINEATOR/GUIDE MARKER		
EAGLE TREE		

H = HOUSE
G = GARAGE
M = MERCHANT/STORE
B = BARN
S = SHED
P = PRIVY
SS= SERVICE STATION
W = WAREHOUSE

	EXISTING	PROPOSED
JUNCTION BOX, TYPE IA		5
JUNCTION BOX, TYPE II		6
JUNCTION BOX, TYPE III		3
SIGNAL FACE, VEHICULAR	42	42
SIGNAL FACE, BACKPLATE	42	42
SIGNAL FACE, LEFT TURN, BACKPLATE	43	43
SIGNAL FACE, PEDESTRIAN		
LOOP DETECTOR	33	73
VIDEO DETECTOR	2	2
RADAR DETECTOR	4	4A
OPTICOM DETECTOR	1	1
PEDESTRIAN PUSH BUTTON	1	1
SIGNAL POST W/O MAST ARM		1
SIGNAL POLE W/MAST ARM		4
SIGNAL CONTROLLER		
LOAD CENTER		
LUMINAIRE		22
RIGID METAL CONDUIT		

	RECOVERED	SET
CONSTRUCTION CENTERLINE	5+00	
MISCELLANEOUS CENTERLINE	10+00	
STATION EQUATION	"L"48+97.23 POT BK= "O"48+97.23 PC AHD	
PROJECT RIGHT-OF-WAY LINE	ROW	
EXISTING PROPERTY LINE		
PROPOSED CUT SLOPE LIMIT		
PROPOSED FILL SLOPE LIMIT		

STATE OF ALASKA 49TH James Brown 14083 REGISTERED PROFESSIONAL ENGINEER

STATE OF ALASKA DEPARTMENT OF TRANSPORTATION AND PUBLIC FACILITIES
6860 GLACIER HIGHWAY, JUNEAU, AK 99811
(907)465-1763

KTN ROOSEVELT DRIVE & FRANKLIN ROAD PAVEMENT REHABILITATION

LEGEND

FILE Q:\Ktn\68663\EN\Dwgs\Sheets\68663_A3_LEGEND.dwg | DATE 7/27/2016 15:47 | LAYOUT A3 | DESIGNED DD | CHECKED JB, LC | DRAFTED DD, JT

NO.	DATE	REVISION

STATE	PROJECT DESIGNATION	YEAR	SHEET NO.	TOTAL SHEETS
ALASKA	Z686630000	2016	A4	55

Roosevelt Drive & Franklin Road Alignment

SEGMENT	START STATION	NORTHING	EASTING	END STATION	RADIUS	LENGTH	DELTA
L1	9+24.00	322863.57	669990.36	11+66.03			
C1	11+66.03	323101.11	669943.96	12+75.09	326.50	109.06	19°08'21"
C2	12+75.09	323202.71	669905.73	14+12.70	101.16	137.61	77°56'20"
C3	14+12.70	323247.97	669786.81	15+74.17	418.54	161.48	22°06'19"
L2	15+74.17	323228.20	669627.56	17+97.63			
C4	17+97.63	323243.68	669404.63	19+27.26	90.00	129.63	82°31'19"
L3	19+27.26	323327.97	669321.04	20+15.35			
C5	20+15.35	323415.89	669315.66	21+59.34	2200.00	144.00	3°45'01"
L4	21+59.34	323559.22	669302.16	22+23.50			
C6	22+23.50	323622.86	669294.06	24+66.02	540.00	242.52	25°43'57"
L5	24+66.02	323862.20	669317.58	28+58.54			
C7	28+58.54	324234.48	669441.98	30+50.94	610.00	192.40	18°04'18"
L6	30+50.94	324404.42	669530.50	31+53.91			
C8	31+53.91	324487.14	669591.82	34+60.51	1170.00	306.59	15°00'51"
L7	34+60.51	324754.41	669740.24	41+84.29			
C9	41+84.29	325427.67	670005.93	43+79.39	915.00	195.10	12°13'00"
L8	43+79.39	325600.17	670096.28	44+79.22			
C10	44+79.22	325683.18	670151.75	46+33.40	2500.00	154.18	3°32'00"
L9	46+33.40	325808.64	670241.30	46+86.51			
C11	46+86.51	325850.90	670273.48	48+28.02	190.00	141.51	42°40'26"
L10	48+28.02	325922.89	670391.52	49+66.83			
C12	49+66.83	325947.09	670528.21	52+34.19	250.00	267.35	61°16'21"
L11	52+34.19	326113.16	670721.45	55+15.38			
L12	55+15.38	326379.53	670811.54	55+96.92			
C13	55+96.92	326450.76	670851.22	56+51.60	150.00	54.68	20°53'10"
L13	56+51.60	326502.28	670868.63	56+92.94			

NOTE: Coordinates in these tables HOLD over bearings and distances.

Roosevelt Spur Alignment

SEGMENT	START STATION	NORTHING	EASTING	END STATION	RADIUS	LENGTH	DELTA
L14	9+30.86	321298.27	667668.75	10+46.05			
C14	10+46.05	321389.90	667738.54	11+57.85	405.00	111.80	15°49'00"
L15	11+57.85	321468.43	667817.61	13+08.46			
C15	13+08.46	321558.85	667938.07	13+98.37	280.00	89.91	18°23'55"
L16	13+98.37	321600.46	668017.34	15+66.80			
C16	15+66.80	321653.88	668177.07	16+61.26	1230.00	94.46	4°24'01"
L17	16+61.26	321687.26	668265.42	17+48.34			
C17	17+48.34	321721.13	668345.63	18+34.90	1185.00	86.56	4°11'07"
L18	18+34.90	321751.86	668426.53	21+93.36			
C18	21+93.36	321866.85	668766.06	23+88.46	145.00	195.10	77°05'28"
L19	23+88.46	322018.84	668863.80	24+66.20			
C19	24+66.20	322096.18	668855.95	26+70.06	330.00	203.86	35°23'41"
L20	26+70.06	322292.50	668897.31	29+72.85			
C20	29+72.85	322555.79	669046.84	31+21.02	1465.00	148.17	5°47'42"
L21	31+21.02	322680.71	669126.40	31+31.03			
C21	31+31.03	322688.87	669132.20	32+40.20	205.00	109.17	30°30'40"
L22	32+40.20	322790.16	669169.34	33+99.47			
C22	33+99.47	322948.85	669182.88	35+10.31	240.00	110.84	26°27'43"
L23	35+10.31	323053.27	669217.03	37+62.79			

HORIZONTAL CONTROL

Horizontal Control for this project is based on the DOT/PF South Tongass Grid 2000.

The DOT/PF Ketchikan South Tongass Grid -2000 System is a local ground coordinate system based at DOT/PF GPS control station 95-K-4 (#36). It relates to AKSPC Zone 1 NAD83 (92) through the following parameters:

Grid Scale = 0.999900264
Convergence = +1°44'48"
Translation about DOT/PF control point 95-K-4 as follows:
AKSPC Northing = 1277612.22 FT US
AKSPC Easting = 3117379.87 FT US
Local Northing = 328083.33 FT US
Local Easting = 656166.67 FT US

Project Specific Basis of Horizontal Control

1 : 2.5" Brass Cap Shoulder Monument Located on the West Side of South Tongass Highway. Point Lies Immediately South of the Intersection with Roosevelt Drive.

NAD83(1992) Lat = 55° 18' 00.4736" N Long = 131° 31' 44.5122"W
KTN_S-Tongass-Grid N = 322868.02' E = 669978.06'
AKSPCS Z1 N =1272820.79' E=3131342.42'

2: 2.5" Brass Cap Shoulder Monument Located on the East Side of South Tongass Highway. Point Lies North of the Northerly Intersection of Roosevelt and South Tongass. Located South 51' +\- from of end of Guardrail on Waterside and across Highway from Driveway to House # 6989.

NAD83(1992) Lat = 55°18' 38.1405" N Long = 131° 31' 28.2495"W
KTN_S-Tongass-Grid N = 326690.18' E = 670917.20'
AKSPCS Z1 N = 1276669.41' E = 3132164.54'

VERTICAL CONTROL

The Vertical Datum for Ketchikan South Tongass Grid 2000 is Mean Lower Low Water based on levels from the National Ocean Service Benchmark NO. 37. The record elevation for NO. 37 is 35.09' above MLLW based on the 1960-1978 tidal epoch for tide station 9450460.

The Project Specific Basis of Vertical Control

#1. A 2.5" Brass Cap Shoulder Monument Located on the West Side of South Tongass Highway. Point Lies Immediately South of the Intersection with Roosevelt Drive. Point #1 has an observed elevation of 42.76' feet above MLLW.

#2. A 2.5" Brass Cap Shoulder Monument Located on the East Side of South Tongass Highway. Point Lies North of the Northerly Intersection of Roosevelt and South Tongass. Located South 51' +\- from of end of Guardrail on Waterside and across Highway from Driveway to House #6989. Point #2 has an observed elevation of 54.46' feet above MLLW.

MONUMENT NOTES:

1. If any pair of control points disagrees from published value by more than 1:10,000 horizontally or vertically then a third network point must be tied to ascertain which point is in error or has been disturbed.

2. Whether listed or not, all monuments, property markers, or accessories that will be disturbed or buried shall be referenced prior to being disturbed, and re-established in their original position and a record of monument form in accordance with A.S.34.65.040 shall be submitted to the construction engineer for review prior to recording. Coordinate values listed are for informational purposes and should be used to reset monuments only as a last resort.

HMF 3.18.20

8.12.16

STATE OF ALASKA 49TH Daniel M. Tyholov No. 11296 REGISTERED PROFESSIONAL LAND SURVEYOR

STATE OF ALASKA
DEPARTMENT OF TRANSPORTATION
& PUBLIC FACILITIES
SOUTHCOAST REGION
6860 GLACIER HIGHWAY
JUNEAU, AK 99811-2506
(907)465-1763

KTN ROOSEVELT DRIVE &
FRANKLIN ROAD
PAVEMENT REHABILITATION
SURVEY CONTROL

DESIGNED J.PAPO
CHECKED D.SMOTOV
DRAFTED J.PAPO

XREFS

SCALE

LAYOUT A4

DATE TIME 7/13/2016 12:45

DRAWING LOCATION
Q:\Ktn\68663\SV\C3D\BASEMAPS\68663_A2_062316.dwg

NO.	DATE	REVISION	STATE	PROJECT DESIGNATION	YEAR	SHEET NO.	TOTAL SHEETS
			ALASKA	Z686630000	2016	A5	55

HMF 3.18.20

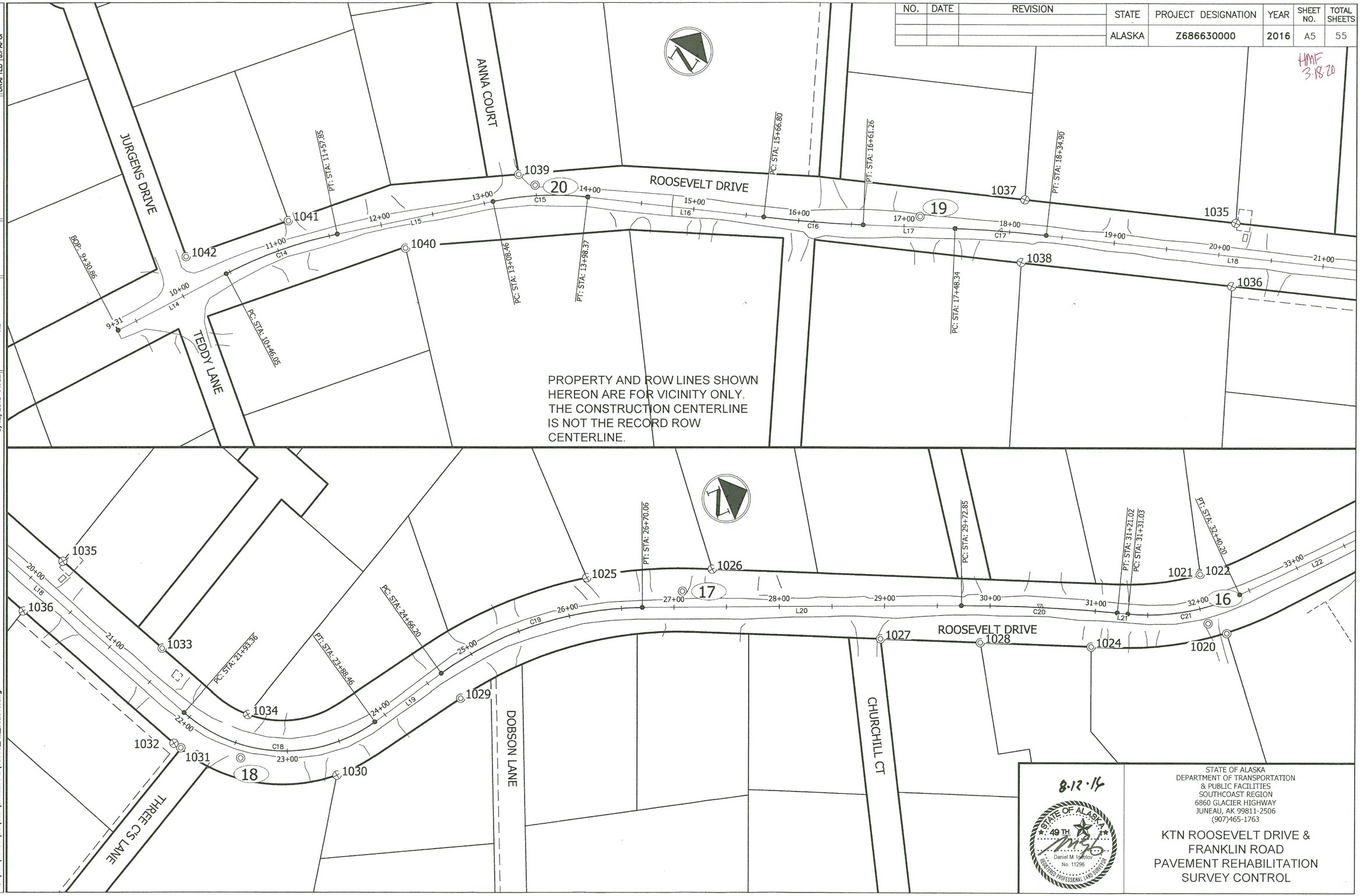

8.12.14

STATE OF ALASKA
49 TH
Daniel M. Ignatov
No. 11296
REGISTERED PROFESSIONAL LAND SURVEYOR

STATE OF ALASKA
DEPARTMENT OF TRANSPORTATION
& PUBLIC FACILITIES
SOUTHCOAST REGION
6860 GLACIER HIGHWAY
JUNEAU, AK 99811-2506
(907)465-1763

KTN ROOSEVELT DRIVE &
FRANKLIN ROAD
PAVEMENT REHABILITATION
SURVEY CONTROL

DESIGNED L.P.APOI
CHECKED D.I.GNOTOV
DRAFTED L.P.APOI

XREFS

SCALE

LAYOUT A5

DATE 8/12/2016 TIME 14:32

DRAWING LOCATION
Q:\Ktn\68663\SV\C3D\BASEMAPS\68663_A2_062316.dwg

NO.	DATE	REVISION

STATE	PROJECT DESIGNATION	YEAR	SHEET NO.	TOTAL SHEETS
ALASKA	Z686630000	2016	A6	55

HMF 3.18.20

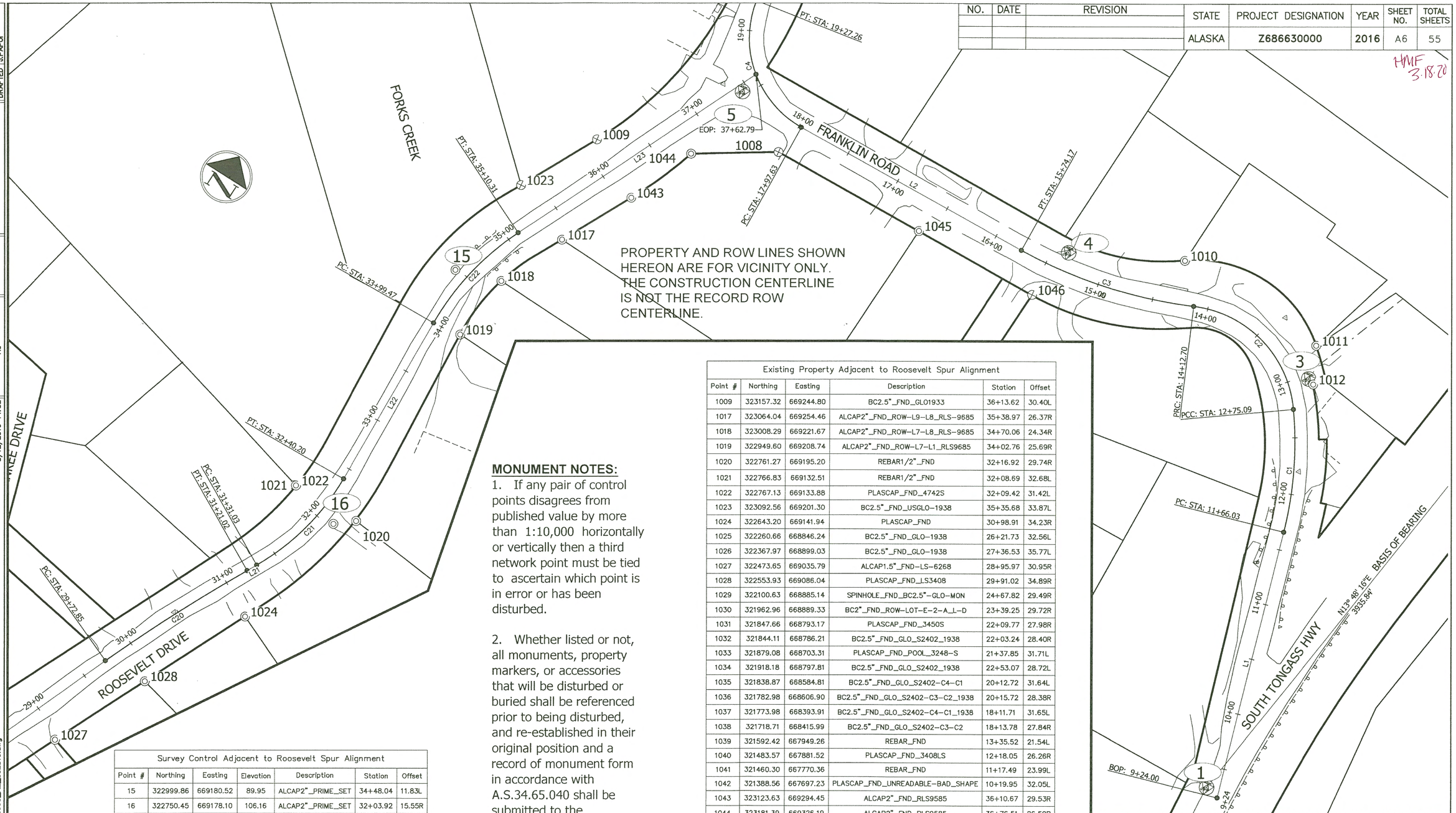

Existing Property Adjacent to Roosevelt Spur Alignment					
Point #	Northing	Easting	Description	Station	Offset
1009	323157.32	669244.80	BC2.5"_FND_GL01933	36+13.62	30.40L
1017	323064.04	669254.46	ALCAP2"_FND_ROW-L9-L8_RLS-9685	35+38.97	26.37R
1018	323008.29	669221.67	ALCAP2"_FND_ROW-L7-L8_RLS-9685	34+70.06	24.34R
1019	322949.60	669208.74	ALCAP2"_FND_ROW-L7-L1_RLS9685	34+02.76	25.69R
1020	322761.27	669195.20	REBAR1/2"_FND	32+16.92	29.74R
1021	322766.83	669132.51	REBAR1/2"_FND	32+08.69	32.68L
1022	322767.13	669133.88	PLASCAP_FND_4742S	32+09.42	31.42L
1023	323092.56	669201.30	BC2.5"_FND_USGLO-1938	35+35.68	33.87L
1024	322643.20	669141.94	PLASCAP_FND	30+98.91	34.23R
1025	322260.66	668846.24	BC2.5"_FND_GLO-1938	26+21.73	32.56L
1026	322367.97	668899.03	BC2.5"_FND_GLO-1938	27+36.53	35.77L
1027	322473.65	669035.79	ALCAP1.5"_FND-LS-6268	28+95.97	30.95R
1028	322553.93	669086.04	PLASCAP_FND_LS3408	29+91.02	34.89R
1029	322100.63	668885.14	SPINHOLE_FND_BC2.5"-GLO-MON	24+67.82	29.49R
1030	321962.96	668889.33	BC2"_FND_ROW-LOT-E-2-A_L-D	23+39.25	29.72R
1031	321847.66	668793.17	PLASCAP_FND_3450S	22+09.77	27.98R
1032	321844.11	668786.21	BC2.5"_FND_GLO_S2402_1938	22+03.24	28.40R
1033	321879.08	668703.31	PLASCAP_FND_POOL_3248-S	21+37.85	31.71L
1034	321918.18	668797.81	BC2.5"_FND_GLO_S2402_1938	22+53.07	28.72L
1035	321838.87	668584.81	BC2.5"_FND_GLO_S2402-C4-C1	20+12.72	31.64L
1036	321782.98	668606.90	BC2.5"_FND_GLO_S2402-C3-C2_1938	20+15.72	28.38R
1037	321773.98	668393.91	BC2.5"_FND_GLO_S2402-C4-C1_1938	18+11.71	31.65L
1038	321718.71	668415.99	BC2.5"_FND_GLO_S2402-C3-C2	18+13.78	27.84R
1039	321592.42	667949.26	REBAR_FND	13+35.52	21.54L
1040	321483.57	667881.52	PLASCAP_FND_3408LS	12+18.05	26.26R
1041	321460.30	667770.36	REBAR_FND	11+17.49	23.99L
1042	321388.56	667697.23	PLASCAP_FND_UNREADABLE-BAD_SHAPE	10+19.95	32.05L
1043	323123.63	669294.45	ALCAP2"_FND_RLS9585	36+10.67	29.53R
1044	323181.39	669326.19	ALCAP2"_FND_RLS9585	36+76.51	26.59R

All **PROPERTY MONUMENTS** in these **existing property** tables shall be **preserved** and **referenced** prior to disturbance and replaced at their original horizontal position. **A RECORD OF MONUMENT FORM SHALL BE PREPARED AND SUBMITTED TO DOT PRIOR TO RECORDING FOR EACH MONUMENT.**

MONUMENT NOTES:

1. If any pair of control points disagrees from published value by more than 1:10,000 horizontally or vertically then a third network point must be tied to ascertain which point is in error or has been disturbed.

2. Whether listed or not, all monuments, property markers, or accessories that will be disturbed or buried shall be referenced prior to being disturbed, and re-established in their original position and a record of monument form in accordance with A.S.34.65.040 shall be submitted to the construction engineer for review prior to recording. Coordinate values listed are for informational purposes and should be used to reset monuments only as a last resort.

Survey Control Adjacent to Roosevelt Spur Alignment						
Point #	Northing	Easting	Elevation	Description	Station	Offset
15	322999.86	669180.52	89.95	ALCAP2"_PRIME_SET	34+48.04	11.83L
16	322750.45	669178.10	106.16	ALCAP2"_PRIME_SET	32+03.92	15.55R
17	322333.12	668902.96	128.26	ALCAP2"_PRIME_SET	27+08.17	15.15L
18	321891.96	668829.70	157.91	ALCAP2"_PRIME_SET	22+58.55	12.25R
19	321717.42	668310.89	170.52	ALCAP2"_PRIME_SET	17+14.89	10.10L
20	321589.70	667967.72	154.97	ALCAP2"_PRIME_SET	13+49.39	9.96L

All **SURVEY CONTROL** monuments in this table are provided strictly for survey control. Should any of them be destroyed during construction they **shall NOT** be replaced.

8.12.16

STATE OF ALASKA
49TH
Daniel M. Ignotov
No. 11296
REGISTERED PROFESSIONAL LAND SURVEYOR

STATE OF ALASKA
DEPARTMENT OF TRANSPORTATION
& PUBLIC FACILITIES
SOUTHCOAST REGION
6860 GLACIER HIGHWAY
JUNEAU, AK 99811-2506
(907)465-1763

KTN ROOSEVELT DRIVE &
FRANKLIN ROAD
PAVEMENT REHABILITATION
SURVEY CONTROL

DESIGNED J.P.APOI
CHECKED D.IGNOTOV
DRAFTED J.P.APOI

XREFS

SCALE

LAYOUT A6

DATE 8/12/2016 TIME 14:32

DRAWING LOCATION
Q:\Ktn\68663\SV\C3D\BASEMAPS\68663_A2_062316.dwg

HMF 3.18.20

NO.	DATE	REVISION

STATE	PROJECT DESIGNATION	YEAR	SHEET NO.	TOTAL SHEETS
ALASKA	Z686630000	2016	A7	55

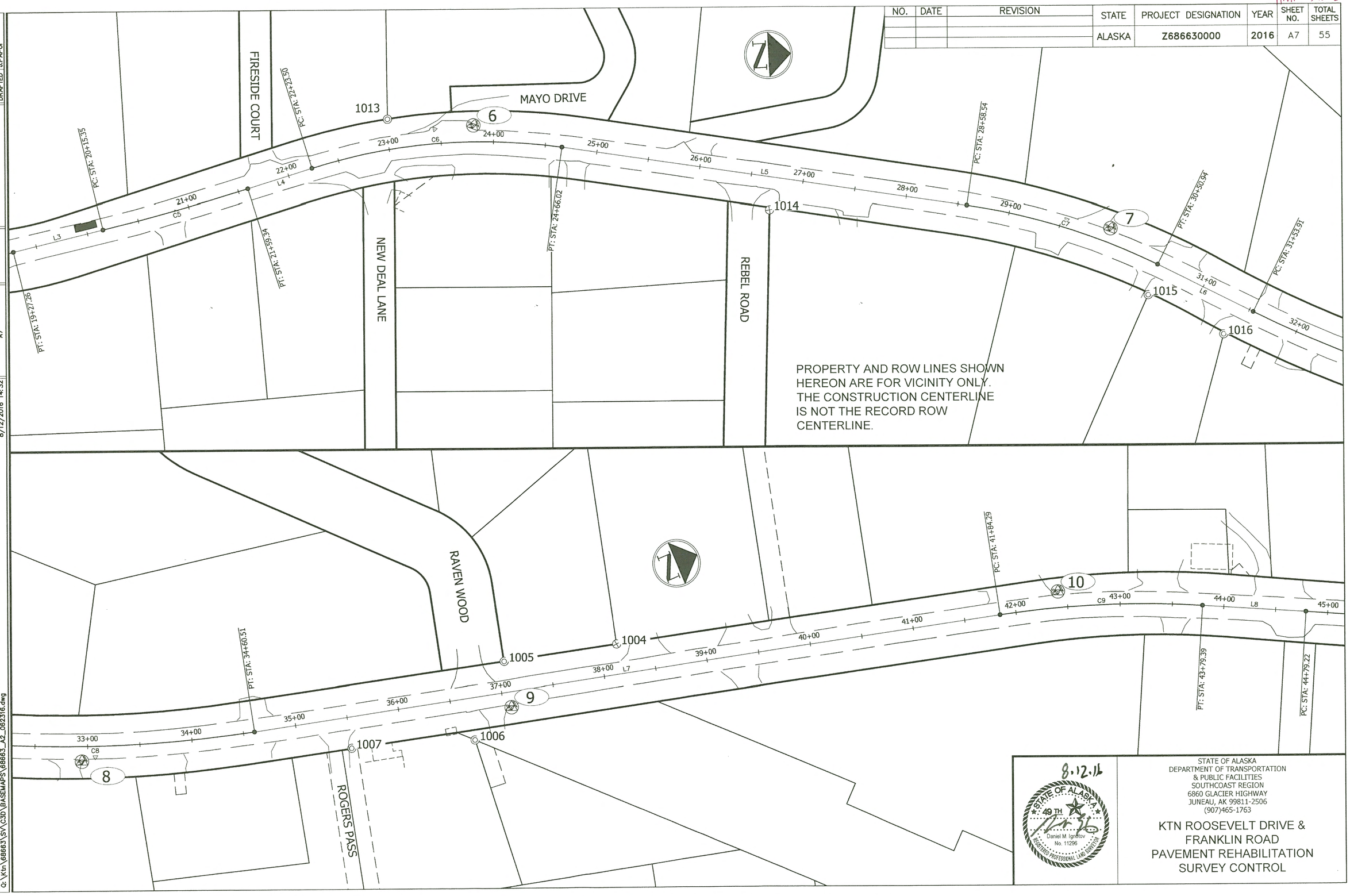

PROPERTY AND ROW LINES SHOWN HEREON ARE FOR VICINITY ONLY. THE CONSTRUCTION CENTERLINE IS NOT THE RECORD ROW CENTERLINE.

8.12.16

STATE OF ALASKA
49TH
Daniel M. Ignatov
No. 11296
REGISTERED PROFESSIONAL LAND SURVEYOR

STATE OF ALASKA
DEPARTMENT OF TRANSPORTATION
& PUBLIC FACILITIES
SOUTHCOAST REGION
6860 GLACIER HIGHWAY
JUNEAU, AK 99811-2506
(907)465-1763

KTN ROOSEVELT DRIVE &
FRANKLIN ROAD
PAVEMENT REHABILITATION
SURVEY CONTROL

DESIGNED J.PAPOI
CHECKED D.IGNOTOV
DRAFTED J.PAPOI

XREFS

SCALE

LAYOUT A7

DATE 8/12/2016 TIME 14:32

DRAWING LOCATION
Q:\Kin\68663\SV\C3D\BASEMAPS\68663_A2_062316.dwg

4MF 3.18.20

NO.	DATE	REVISION

STATE	PROJECT DESIGNATION	YEAR	SHEET NO.	TOTAL SHEETS
ALASKA	Z686630000	2016	A8	55

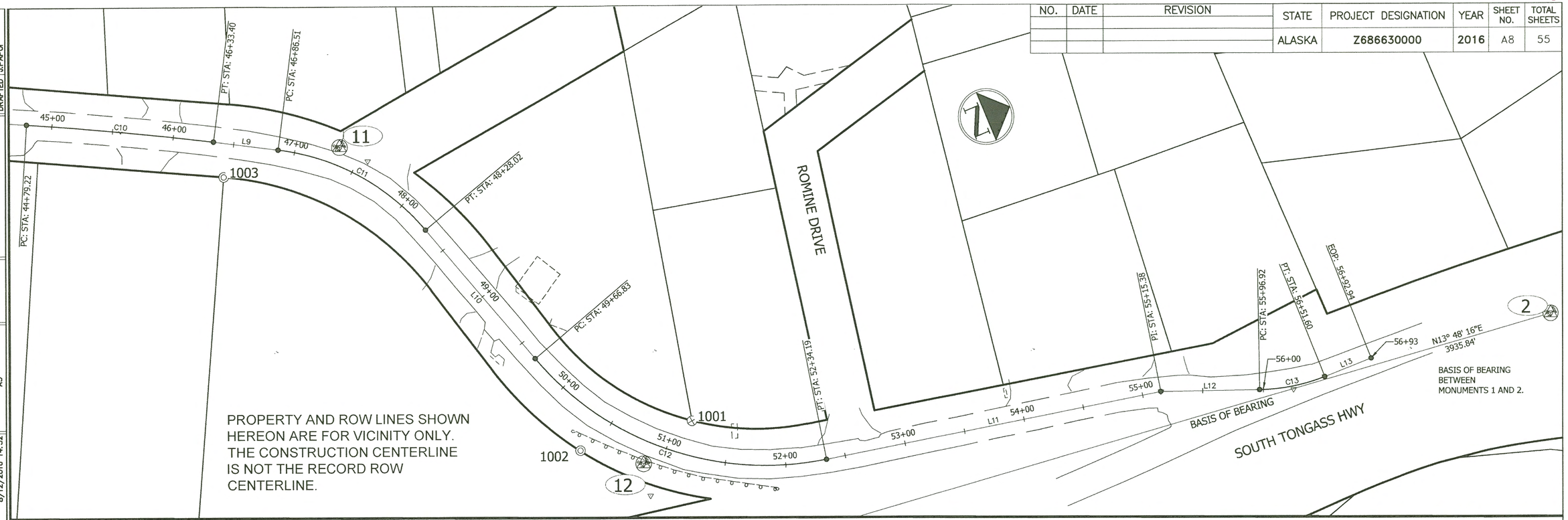

Existing Property Adjacent to Roosevelt & Franklin Alignment					
Point #	Northing	Easting	Description	Station	Offset
1001	326033.12	670637.93	BC2.5"_FND_GLO1938	51+13.92	28.31L
1002	325941.38	670612.69	ALCAP2"_FND_3491S	50+40.62	32.56R
1003	325801.31	670270.43	ALCAP2"_FND_3491S	46+45.20	27.62R
1004	325096.12	669844.02	BC2"_FND_C18	38+16.45	28.90L
1005	324994.40	669803.42	ALCAP2"_FND_LS7219	37+06.93	29.32L
1006	324932.73	669853.65	ALCAP1"_FND_LS6269	36+68.00	40.04R
1007	324826.85	669800.74	ALCAP2"_FND_3491S	35+50.09	29.69R
1008	323215.31	669395.45	ALCAP3.25"_FND_DOT	18+03.07	29.16L
1010	323281.36	669762.61	ALCAP1"_FND_S6269	14+26.61	39.05R
1011	323262.46	669900.26	ALCAP1"_FND_GLO1938	13+16.18	36.52R
1012	323230.17	669912.45	ALCAP1"_FND_S6269	12+91.98	21.32R
1013	323702.62	669261.05	ALCAP2"_FND_LS3491	23+02.85	28.81L
1014	324047.64	669412.42	BC2.5"_LEANING_S2402	26+71.96	31.18R
1015	324390.31	669557.60	REBAR_FND	30+55.74	30.18R
1016	324455.36	669607.80	REBAR_FND	31+37.90	31.76R
1045	323204.89	669537.81	ALCAP2"_FND_RLS9585	16+62.09	29.47L
1046	323196.45	669652.85	BC2.5"_FND_GLO_1938	15+48.60	30.76L

All **PROPERTY MONUMENTS** in these **existing property** tables shall be **preserved** and **referenced** prior to disturbance and replaced at their original horizontal position. **A RECORD OF MONUMENT FORM SHALL BE RECORDED FOR EACH MONUMENT.**

Survey Control Adjacent to Roosevelt & Franklin Alignment						
Point #	Northing	Easting	Elevation	Description	Station	Offset
3	323232.92	669906.60	64.81	GPS_ALCAP2.5"_DOT_SET	12+96.93	18.73R
4	323243.98	669666.07	79.23	GPS_ALCAP2.5"_DOT_SET	15+35.24	16.68R
5	323250.14	669344.05	84.19	GPS_ALCAP2.5"_DOT_SET	18+52.22	16.81L
6	323782.26	669281.57	100.48	GPS_ALCAP2.5"_DOT_SET	23+80.90	15.70L
7	324366.34	669488.27	99.80	GPS_ALCAP2.5"_DOT_SET	29+96.36	13.74L
8	324597.78	669680.89	98.00	GPS_ALCAP2.5"_DOT_SET	32+94.47	14.20R
9	324978.64	669844.43	108.21	GPS_ALCAP2.5"_DOT_SET	37+07.33	14.61R
10	325486.91	670014.62	96.80	GPS_ALCAP2.5"_DOT_SET	42+41.65	15.48L
11	325895.39	670296.93	87.83	GPS_ALCAP2.5"_DOT_SET	47+33.08	14.41L
12	325981.06	670648.52	82.01	GPS_ALCAP2.5"_DOT_SET	50+87.44	18.12R

All **SURVEY CONTROL** monuments in this table are provided strictly for survey control. Should any of them be destroyed during construction they **shall NOT** be replaced.

Shoulder Monuments South Tongass Highway Adjacent to Roosevelt & Franklin Alignment						
Point #	Northing	Easting	Elevation	Description	Station	Offset
1	322868.02	669978.07	42.76	GPS_DOT_BC2.5"_FND	9+30.72	11.22L
2	326690.18	670917.20	54.46	GPS_DOT_BC2.5"_FND	13+50.22	3603.90R
13	322167.00	669972.70	41.37	BC_SH-MON_FND	14+56.99	1093.61L
14	327469.47	671119.04	64.73	BC_SH-MON_FND	13+51.08	4408.16R

EXISTING SHOULDER AND CENTERLINE MONUMENTS 1,2,13 & 14 **SHALL BE PRESERVED IN PLACE**.

MONUMENT NOTES:

1. If any pair of control points disagrees from published value by more than 1:10,000 horizontally or vertically then a third network point must be tied to ascertain which point is in error or has been disturbed.

2. Whether listed or not, all monuments, property markers, or accessories that will be disturbed or buried shall be referenced prior to being disturbed, and re-established in their original position and a record of monument form in accordance with A.S.34.65.040 shall be submitted to the construction engineer for review prior to recording. Coordinate values listed are for informational purposes and should be used to reset monuments only as a last resort.

8.12.16

STATE OF ALASKA 49TH Daniel M. Ignotov No. 11296 REGISTERED PROFESSIONAL LAND SURVEYOR

STATE OF ALASKA
DEPARTMENT OF TRANSPORTATION
& PUBLIC FACILITIES
SOUTHCOAST REGION
6860 GLACIER HIGHWAY
JUNEAU, AK 99811-2506
(907)465-1763

KTN ROOSEVELT DRIVE &
FRANKLIN ROAD
PAVEMENT REHABILITATION
SURVEY CONTROL

DESIGNED J.PAPOI
CHECKED J. IGNOTOV
DRAFTED J.PAPOI

XREFS

SCALE

LAYOUT A5

DATE 8/12/2016 TIME 14:32

DRAWING LOCATION
Q:\Ktn\68663\SV\C3D\BASEMAPS\68663_A2_062316.dwg

HMF 3.18.20

NO.	DATE	REVISION	STATE	PROJECT DESIGNATION	YEAR	SHEET NO.	TOTAL SHEETS
			ALASKA	Z686630000	2016	B1	55

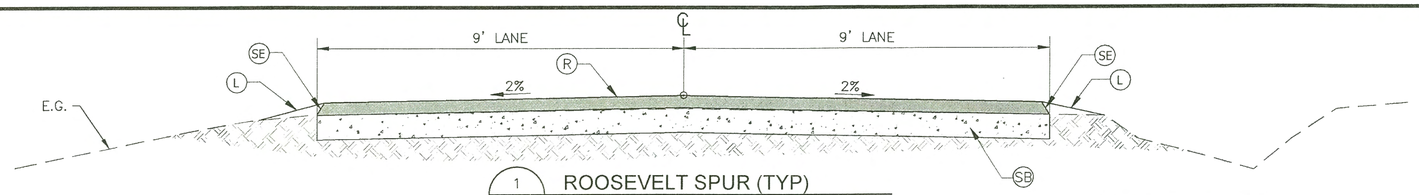

1 / B1 ROOSEVELT SPUR (TYP)
LINE "B" STA. 10+16 TO STA. 34+49
STA. 35+04 TO STA. 37+52
*SEE DETAILS 1A & 1B THIS SHEET

D-1 FILL TO RAISE GRADE WHEN NEEDED

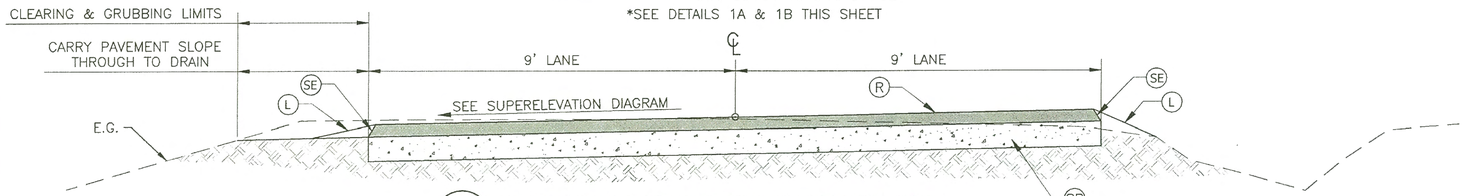

2 / B1 ROOSEVELT SPUR SUPERELEVATION (TYP)
*SEE SUPERELVATION DIAGRAM ON F SHEETS

D-1 FILL TO RAISE GRADE WHEN NEEDED

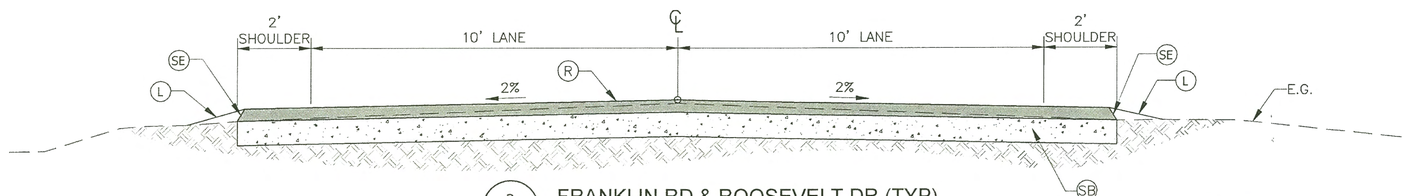

3 / B1 FRANKLIN RD & ROOSEVELT DR (TYP)
LINE "O" STA. 9+28 TO STA. 12+00
STA. 16+60 TO STA. 54+00

D-1 FILL TO RAISE GRADE WHEN NEEDED

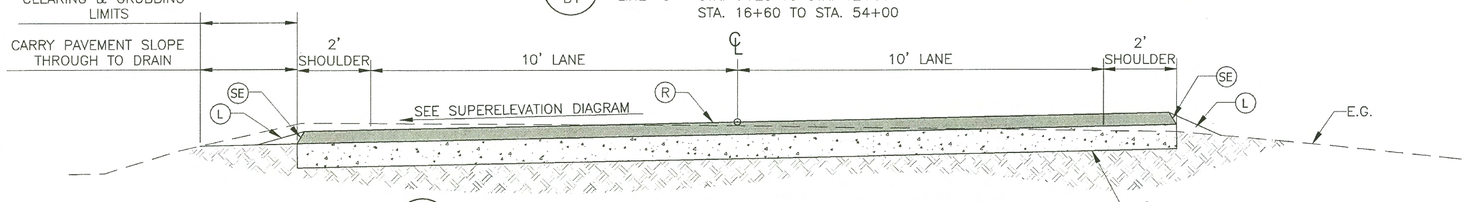

4 / B1 FRANKLIN RD & ROOSEVELT DR SUPERELEVATION (TYP)
*SEE SUPERELEVATION DIAGRAM F SHEETS

D-1 FILL TO RAISE GRADE WHEN NEEDED

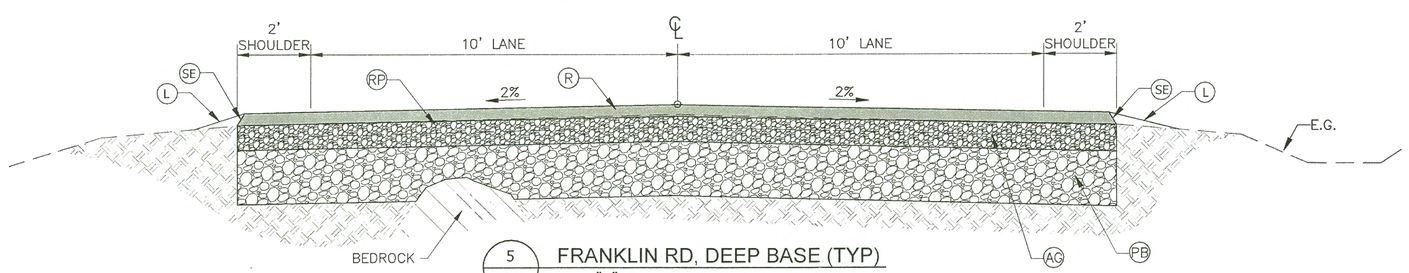

5 / B1 FRANKLIN RD, DEEP BASE (TYP)
LINE "O" STA. 12+00 TO STA. 16+60

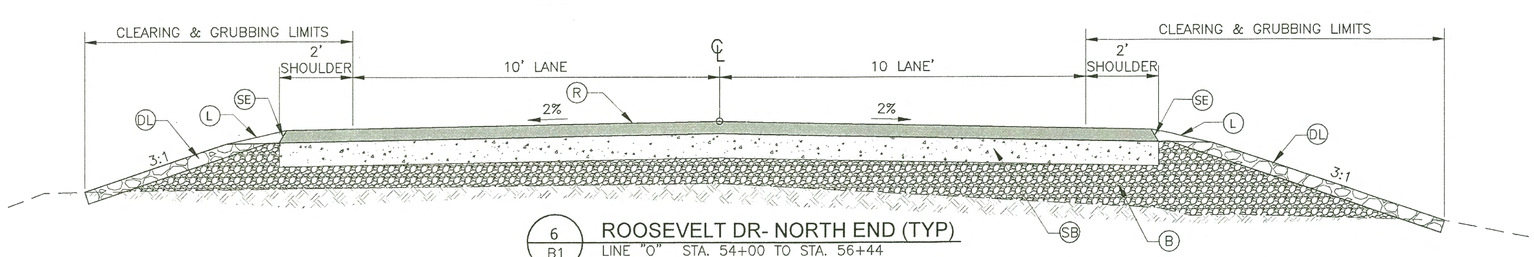

6 / B1 ROOSEVELT DR- NORTH END (TYP)
LINE "O" STA. 54+00 TO STA. 56+44

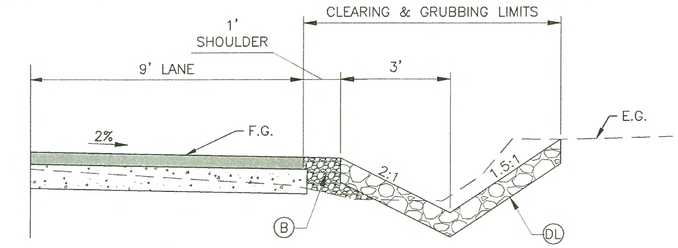

1A / B1 ROOSEVELT SPUR DITCH TYPICAL RIGHT
LINE "B" STA. 12+00 TO STA. 14+00

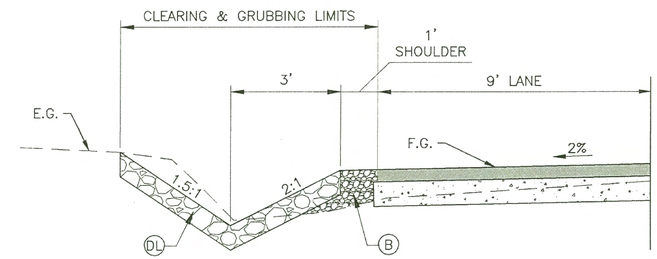

1B / B1 ROOSEVELT SPUR DITCH TYPICAL LEFT
LINE "B" STA. 12+30 TO STA. 13+15
STA. 13+45 TO STA. 14+20

LEGEND

- (L) LINEAR GRADING, 303(3)
- (R) 2" HMA, TYPE II; CLASS B, 401(1)
- (TC) STE-1 ASPHALT FOR TACK COAT
- (AG) 4" AGGREGATE BASE COURSE, GRADING D-1, 301(1)
- (SE) SAFETY EDGE
- (SB) 4" CRUSHED ASPHALT BASE COURSE, 308(1,2,3,)
- (PB) 10" POROUS BACKFILL MATERIAL, 205(4) OR DEPTH TO BEDROCK (WHICHEVER IS LESS)
- (RP) REMOVAL OF PAVEMENT, 202(2)
- (DL) 8" DITCH LINING
- (B) VARYING DEPTH AGGREGATE BASE COURSE, GRADING D-1, 301(1)
- ⊙ PROFILE LAYOUT POINT

STATE OF ALASKA 49TH James Brown 14083 REGISTERED PROFESSIONAL ENGINEER

STATE OF ALASKA DEPARTMENT OF TRANSPORTATION AND PUBLIC FACILITIES
6860 GLACIER HIGHWAY, JUNEAU, AK 99811
(907)465-1763

KTN ROOSEVELT DRIVE & FRANKLIN ROAD PAVEMENT REHABILITATION

TYPICAL SECTIONS

FILE Q:\Ktn\68663\EN\Dwgs\Sheets\68663_B1_TYPICAL.dwg | DATE 8/15/2016 11:42 | LAYOUT B1 | DESIGNED DD | CHECKED JB, LC | DRAFTED DD, JT

HMF 3.18.23

NO.	DATE	REVISION	STATE	PROJECT DESIGNATION	YEAR	SHEET NO.	TOTAL SHEETS
			ALASKA	Z686630000	2016	C1	55

ESTIMATE OF QUANTITIES

ITEM No.	PAY ITEM	PAY UNIT	QTY.
201(3B)	CLEARING AND GRUBBING	LUMP SUM	ALL REQUIRED
201(7)	INVASIVE SPECIES CONTROL, REMOVAL, AND DISPOSAL	SQUARE YARD	2,235.00
202(1)	REMOVAL OF STRUCTURES AND OBSTRUCTIONS	LUMP SUM	ALL REQUIRED
202(2)	REMOVAL OF PAVEMENT	SQUARE YARD	~~1,100~~ 1811.57
202(4)	REMOVAL OF CULVERT PIPE	LINEAR FOOT	~~230~~ 261.00
202(10)	SINGLE MAILBOX INSTALATION	EACH	~~27~~ 26.00
202(11)	MULTIPLE MAILBOX INSTALATION	EACH	~~16~~ 15.00
202(12)	DOUBLE MAILBOX INSTALATION	EACH	10.00
203(3)	UNCLASSIFIED EXCAVATION	CUBIC YARD	~~1,900~~ 1546.70
205(4)	POROUS BACKFILL MATERIAL	CUBIC YARD	~~296~~ 462.64
301(1)	AGGREGATE BASE COURSE, GRADING D-1	TON	~~2,100~~ 5252.23
303(3)	LINEAR GRADING	STATION	~~148~~ 147.74
303(4)	DITCH RECONDITIONING	STATION	1.43
308(1)	CRUSHED ASPHALT BASE COURSE	SQUARE YARD	~~19,800~~ 16771.20
308(2)	CSS-1 ASPHALT FOR BASE COURSE	TON	~~202~~ 118.94
308(3)	PORTLAND CEMENT	TON	~~67~~ 40.48
401(1)	HMA, TYPE II; CLASS B	TON	~~2,403~~ 2621.09
401(4)	ASPHALT BINDER, GRADE PG 58-28	TON	~~148~~ 130.055
401(8)	HMA PRICE ADJUSTMENT, TYPE II, CLASS B	CONTINGENT SUM	ALL REQUIRED
401(9)	LONGITUDINAL JOINT DENSITY PRICE ADJUSTMENT	CONTINGENT SUM	ALL REQUIRED
603(9)	24 INCH CORRUGATED ALUMINUM PIPE	LINEAR FOOT	15.00
603(21-24)	24 INCH CORRUGATED POLYETHYLENE PIPE	LINEAR FOOT	~~75~~ 132.60
603(21-36)	36 INCH CORRUGATED POLYETHYLENE PIPE	LINEAR FOOT	~~127~~ 81.10
603(100)	MITER CULVERT	EACH	~~5~~ 4.00
604(3)	RECONSTRUCT EXISTING MANHOLE	EACH	~~8~~ 13.00
604(4)	ADJUST EXISTING MANHOLE	EACH	~~11~~ 7.00
606(1)	W-BEAM GUARDRAIL	LINEAR FOOT	~~325~~ 334.00
606(6)	REMOVING AND DISPOSING OF GUARDRAIL	LINEAR FOOT	~~388~~ 400.00
606(13)	PARALLEL GUARDRAIL TERMINAL	EACH	3.00
610(1)	DITCH LINING	STATION	~~74~~ 8.920
611(1)	RIPRAP, CLASS 1	CUBIC YARD	~~8~~ 16.7
615(1)	STANDARD SIGN	SQUARE FOOT	~~255~~ 253.3
615(6)	SALVAGE SIGN	EACH	~~88~~ 0.00
629(1)	GUARDRAIL PAVING	LINEAR FOOT	~~3125~~ 356.0
639(3)	APPROACH	EACH	~~87~~ 89.0
640(1)	MOBILIZATION AND DEMOBILIZATION	LUMP SUM	ALL REQUIRED
640(4)	WORKER MEALS AND LODGING, OR PER DIEM	LUMP SUM	ALL REQUIRED
641(1)	EROSION, SEDIMENT AND POLLUTION CONTROL ADMINISTRATION	LUMP SUM	ALL REQUIRED
641(3)	TEMPORARY EROSION, SEDIMENT AND POLLUTION CONTROL	LUMP SUM	ALL REQUIRED
641(5)	TEMPORARY EROSION, SEDIMENT AND POLLUTION CONTROL BY DIRECTIVE	CONTINGENT SUM	ALL REQUIRED
641(6)	WITHHOLDING	CONTINGENT SUM	ALL REQUIRED
642(1)	CONSTRUCTION SURVEYING	LUMP SUM	ALL REQUIRED
642(3A)	THREE MAN SURVEY PARTY	CONTINGENT SUM	ALL REQUIRED
643(2)	TRAFFIC MAINTENANCE	LUMP SUM	ALL REQUIRED
643(3)	PERMANENT CONSTRUCTION SIGNS	LUMP SUM	ALL REQUIRED
643(15)	FLAGGING	CONTINGENT SUM	ALL REQUIRED
643(25)	TRAFFIC CONTROL	CONTINGENT SUM	ALL REQUIRED
644(1)	FIELD OFFICE	LUMP SUM	ALL REQUIRED
670(1)	PAINTED TRAFFIC MARKINGS	LUMP SUM	ALL REQUIRED
627(10)	ADJUSTMENT OF VALVE BOX (IWA-1, CO-2)	ALL REQUIRED	ALL REQUIRED
603(21-18)	REPLACE 18" CPP (CO#1)	ALL REQUIRED	ALL REQUIRED
203(2)	ROCK EXCAVATION (CO#1)	ALL REQUIRED	ALL REQUIRED
308(1.1)	CABC INSPECTION (IWA #5 CO-2)	ALL REQUIRED	ALL REQUIRED
303(5)	DITCH CONSTRUCTION (CO#1)	ALL REQUIRED	ALL REQUIRED
627(11)	WATERLINE REPAIR (CO#1)	ALL REQUIRED	ALL REQUIRED
308(1.2)	CABC ADD'L GRIND, BLINE (CO#1)	# 3.00	3932.00
401(1.1)	MATERIAL TRANSFER DEVICE CREDIT (CO#1)	ALL REQUIRED	ALL REQUIRED
301(1.1)	D-1 CREDIT (CO-4)	ALL REQUIRED	ALL REQUIRED
604(2)	SS MH FRAME AND LID (CO-4)	ALL REQUIRED	ALL REQUIRED
615(1.1)	ADDITIONAL STANDARD SIGNS (CO-4)	ALL REQUIRED	ALL REQUIRED
205(4.1)	PB MATERIAL CREDIT (CO-4)	ALL REQUIRED	ALL REQUIRED

BASIS OF ESTIMATE

ITEM NO.	ITEM	ESTIMATING FACTOR
201(3B)	CLEARING AND GRUBBING	0.25 ACRES
202 (1)	REMOVAL OF STRUCTURES AND OBSTRUCTIONS	150 ft CHAIN LINK FENCE
301 (1)	AGGREGATE BASE COURSE, GRADING D-1	1.95 TONS/C.Y.
401 (1)	HMA, TYPE II; CLASS B	120 LBS./S.Y./IN.
401 (4)	ASPHALT BINDER, GRADE PG-58-28	6.0% OF ITEM 401(1)
670(1)	PAINTED TRAFFIC MARKINGS	8,800 ft WHITE, 4,200 ft DOUBLE-YELLOW

STATE OF ALASKA
49th
Keith D. Karpstein
March 6, 2017
CE-12904
REGISTERED PROFESSIONAL ENGINEER

STATE OF ALASKA DEPARTMENT OF TRANSPORTATION AND PUBLIC FACILITIES
6860 GLACIER HIGHWAY, JUNEAU, AK 99811
(907)465-1763

KTN ROOSEVELT DRIVE & FRANKLIN ROAD PAVEMENT REHABILITATION

ESTIMATE OF QUANTITIES

FILE Q:\Ktn\68663\EN\Dwgs\Sheets\68663_C1_ESTIMATE.dwg | DATE 8/15/2016 12:26 | LAYOUT C1 | DESIGNED DD | CHECKED JB, LC | DRAFTED DD, JT

4MF 3.18.20

NO.	DATE	REVISION	STATE	PROJECT DESIGNATION	YEAR	SHEET NO.	TOTAL SHEETS
			ALASKA	Z686630000	2016	D1	55

202(10) SINGLE MAILBOX INSTALLATION

STA.	OFFSET	NUMBER	REMARKS
Franklin Road			Line "O"
15+84	LT.	1	
17+11	LT.	1	
Roosevelt Spur (South)			Line "B"
17+51	RT.	1	
19+17	LT.	1	
20+45	RT.	1	
22+01	LT.	1	
22+48	RT.	1	
23+64	RT.	1	
24+56	LT.	1	
28+10	LT.	1	
29+25	RT.	1	
30+30	LT.	1	
30+82	RT.	1	
31+01	LT.	1	
31+41	RT.	1	
34+63	RT.	1	
Roosevelt Drive (North)			Line "O"
22+14	LT.	1	
24+78	LT.	1	
27+03	LT.	1	
29+33	LT.	1	FISH
29+61	LT.	1	
41+71	LT.	1	
44+93	LT.	1	
49+55	LT.	1	
51+47	LT.	1	
53+89	LT.	1	NEW BOX
55+00	LT.	1	

26.00 each

202(11) MULTIPLE MAILBOX INSTALLATION

STA.	OFFSET	NUMBER	REMARKS
Franklin Road			Line "O"
14+27	LT.	4	
Roosevelt Spur (South)			Line "B"
16+75	RT.	3	
16+79	RT.	4	
16+83	RT.	4	
16+88	RT.	3	
25+81	LT.	4	
27+51	LT.	3	
28+52	RT.	4	
28+56	RT.	4	
29+69	LT.	3	
Roosevelt Drive (North)			Line "O"
23+91	LT.	4	
26+25	LT.	4	
26+29	LT.	4	
43+18	LT.	3	
47+25	LT.	4	
52+29	LT.	4	

15.00 each

202(12) DOUBLE MAILBOX INSTALLATION

STA.	OFFSET	NUMBER	REMARKS
Franklin Road			Line "O"
12+97	RT.	2	
17+72	LT.	2	
23+95	LT.	2	
Roosevelt Spur (South)			Line "B"
22+14	RT.	2	
25+58	LT.	2	
28+70	RT.	2	
Roosevelt Drive (North)			Line "O"
32+07	LT.	2	
34+29	LT.	2	
38+94	LT.	2	
45+66	LT.	2	

10.00 EACH

202(4) REMOVAL OF CULVERT PIPE

STA.	DIAMETER	LENGTH	REMARKS
Franklin Road		Line "O"	
13+88	24	5	FROM OUTLET REPLACED BY P-1, SEE DETAIL 2, SHEET E3
Roosevelt Drive (North)		Line "O"	
19+81	24	5	FROM OUTLET REPLACED BY P-3, SEE DETAIL 2, SHEET E3
48+00	36	60	REPLACED BY P-14
Roosevelt Spur (South)		Line "B"	
26+16	36	40	REPLACED BY P-15
30+07	24	40	REPLACED BY P-16
31+64	36	40	REPLACED BY P-17
36+40	24	5	FROM INLET REPLACED BY P-18, SEE DETAIL 2 , SHEET E3
36+74	18	35	REPLACED BY P-19

261.00 LF

303(3) LINEAR GRADING

BEGIN STA.	END STA.	QUANTITY (STA.)	REMARKS
9+30	56+45	48	LINE "O" LT & RT
10+16	37+50	28	LINE "B" LT & RT

147.74 STATION

NOTE: NO LINEAR GRADING BEHIND GUARDRAIL (335')

303(4) DITCH RECONDITIONING

LINE	STATION TO STATION		OFFSET	LENGTH	REMARKS
B	10+16	10+91	RT	75	SEE DETAIL 1, SHEET E1
B	11+32	12+00	RT	68	SEE DETAIL 1, SHEET E1
			TOTAL=	1.43 ~~1.4~~ STATIONS	

603(9) 24" CORRUGATED ALUMINUM PIPE

PIPE	STA.	OFFSET	LENGTH (FT)	ELEVATIONS	REMARKS
Franklin Road			Line "O"		
P-1	13+56.75	16.25' LT	5	OUTLET 66.70'	RECONSTRUCT OUTLET PER DETAIL 2, SHEET E3
Roosevelt Drive (North)			Line "O"		
P-3	19+80.18	21.95' RT	5	OUTLET 80.66'	RECONSTRUCT OUTLET PER DETAIL 2, SHEET E3
Roosevelt Spur (South)			Line "B"		
P-18	36+39.01	13.96' LT	5	INLET 81.98'	RECONSTRUCT OUTLET PER DETAIL 2, SHEET E3

15.00 LF

603(21- 24" & 36") CPP

PIPE	INLET			DIAMETER	LENGTH	OUTLET			REMARKS
	STA	OFFSET	INV. ELEV.			STA	OFFSET	INV. ELEV.	
FRANKLIN/ROOSEVELT DR LINE "O"									
P-14	47+99.80	56.8' LT	81.32	36	57	47+99.55	29.9'RT	78.71	SEE DETAIL 1, SHEET E4
ROOSEVELT SPUR LINE "B"									
P-15	26+07.06	17.0' LT	125.56'	36	40	26+26.05	18.0' RT	124.82'	SEE DETAIL 2, SHEET E4
P-16	30+18.74	17.4' LT	109.62'	24	40	29+96.13	15.8' RT	110.49'	SEE DETAIL 3, SHEET E4
P-17	31+57.30	16.9' LT	103.02'	36	40	31+70.64	20.7' RT	100.57'	SEE DETAIL 4, SHEET E4
P-19	36+57.59	20.5' LT	82.70'	24	35	36+89.24	19.8' LT	84.65'	SEE DETAIL 5, SHEET E4

132.60 LF

603(100) MITER CULVERT

PIPE	STA.	MITER END	REMARKS
Franklin Road			LINE "O"
P-2	16+07	OUTLET	SEE DETAIL 4, SHEET E3
Roosevelt Drive (North)			LINE "O"
P-8	36+65	OUTLET	SEE DETAIL 4, SHEET E3
P-9	43+12	INLET & OUTLET	SEE DETAIL 4, SHEET E3
Roosevelt Spur (South)			LINE "B"
P-18	36+40	INLET	SEE DETAIL 4, SHEET E3

4.00 EACH

Establish New Item 603(21-18) 18 Inch Corrugated Polyethylene Pipe C.O #1

DESCRIPTION: This item is for all labor, materials, equipment and incidentals necessary to install 18" Corrugated Polyethylene Pipe (CPP). It converts Interim Work Authorization No. 3 from a Time and Materials basis to a lump sum item.

356.0 LF

629(1) GUARDRAIL PAVING

LINE "O" STA. TO STA.		OFFSET	REMARKS
10+72.5	12+05	RT	
50+25	52+05	RT	

604(3,4) ADJUST/RECONSTRUCT MANHOLE

STA.	OFFSET	REMARKS
Franklin Road		Line "O"
9+53	7.5 'LT.	ADJUST TO FINISHED GRADE
9+68	9.8 'LT.	RECONSTRUCT
11+54	1.2 'LT.	RECONSTRUCT
12+89	1.5 'RT.	RECONSTRUCT
22+74	17 'RT.	RECONSTRUCT
24+24	18 'RT.	ADJUST TO FINISHED GRADE
29+47	18 'RT.	ADJUST TO FINISHED GRADE
38+63	11 'RT.	FIELD VERIFY RECONSTRUCT OR ATG
51+17	10 'RT.	FIELD VERIFY RECONSTRUCT OR ATG
55+79	6 RT.	FIELD VERIFY RECONSTRUCT OR ATG
Roosevelt Spur (South)		Line "B"
16+28	1.7 'LT.	FIELD VERIFY RECONSTRUCT OR ATG
18+99	3.4 'RT.	FIELD VERIFY RECONSTRUCT OR ATG
21+27	5.6 'RT.	FIELD VERIFY RECONSTRUCT OR ATG
22+34	6.5 'RT.	FIELD VERIFY RECONSTRUCT OR ATG
23+42	5.9 'RT.	FIELD VERIFY RECONSTRUCT OR ATG
25+45	2.8 'RT.	FIELD VERIFY RECONSTRUCT OR ATG
26+84	0.7 'LT.	FIELD VERIFY RECONSTRUCT OR ATG
31+93	5.3 'RT.	FIELD VERIFY RECONSTRUCT OR ATG
34+09	7.5 'RT.	FIELD VERIFY RECONSTRUCT OR ATG
FIELD VERIFY LOCATIONS OF MANHOLE ADJUSTMENTS AND RECONSTRUCTIONS		

604(3) 13.00 each 604(4) 7.00 EACH

606(1) W-BEAM GUARDRAIL

LINE "O" STA. TO STA.		OFFSET	LENGTH	REMARKS
11+10	12+05	13 'RT.	95	GUARDRAIL PAVING, INSTALL LONG SPAN W BEAM GUARDRAIL PER G-28.00 CASE C. UNDERGROUND OBSTRUCTION LOCATED STA:11+72-11+85
11+35	12+32.5	13 'LT.	97.5	NO GUARDRAIL PAVING, INSTALL LONG SPAN W BEAM GUARDRAIL PER G-28.00 CASE C. UNDERGROUND OBSTRUCTION LOCATED STA:11+72-11+85
50+62.5	52+05	13 'RT.	142.5	GUARDRAIL PAVING

334.00 LF

606(6) REMOVAL & DISPOSAL OF GUARDRAIL

BEGIN STA.	END STA.	OFFSET	REMARKS
10+81	12+06	13 'RT.	FRANKLIN RD. ARCH CULVERT
11+33	12+30	13 'LT.	FRANKLIN RD. ARCH CULVERT
50+27	51+93	14 'RT.	ROOSEVELT DR.

400.00 LF

GUARDRAIL END TREATMENT

"O" LINE STA.	OFFSET	ITEM	REMARKS
10+72.5	RT	603(13) PARALLEL GUARDRAIL TERMINAL	LENGTH = 37.5 FT, INSTALL PER G-20.11 STANDARD GUARDRAIL TERMINAL WIDENING DETAIL, MODIFY NOTE 5 SIDE SLOPE TO 2:1
11+35	LT	606(1) TERMINAL ANCHOR	INSTALL PER G-13.00
12+05	RT	606(1) TERMINAL ANCHOR	INSTALL PER G-13.00
12+70	LT	603(13) PARALLEL GUARDRAIL TERMINAL	LENGTH = 37.5 FT, INSTALL PER G-20.11 ALTERNATE GUARDRAIL TERMINAL WIDENING DETAIL
50+25	RT	603(13) PARALLEL GUARDRAIL TERMINAL	LENGTH = 37.5 FT, INSTALL PER G-20.11 STANDARD GUARDRAIL TERMINAL WIDENING DETAIL
52+05	RT	606(1) TERMINAL ANCHOR	INSTALL PER G-13.00

STATE OF ALASKA 49TH James Brown 14063 REGISTERED PROFESSIONAL ENGINEER

STATE OF ALASKA DEPARTMENT OF TRANSPORTATION AND PUBLIC FACILITIES
6860 GLACIER HIGHWAY, JUNEAU, AK 99811
(907)465-1763

KTN ROOSEVELT DRIVE & FRANKLIN ROAD PAVEMENT REHABILITATION

SUMMARIES

FILE Q:\Ktn\68663\EN\Dwgs\Sheets\68663_D1_SUMMARIES.dwg | DATE 8/15/2016 13:13 | LAYOUT D1 | DESIGNED DD | CHECKED JB, LC | DRAFTED DD, JT

HMF 3.18.20

NO.	DATE	REVISION	STATE	PROJECT DESIGNATION	YEAR	SHEET NO.	TOTAL SHEETS
			ALASKA	Z686630000	2016	D2	55

615(1) STANDARD SIGN SUMMARY

SIGN NO.	LEGEND	STA	OFFSET	ASDS CODE	WIDTH (IN)	HEIGHT (IN)	AREA (SF)	POST	SIGN FACING	COMMENTS
	Franklin Road	Line "O"								
1	Franklin Rd	9+75	L	D3-1	42	12	3.50	2.5 PST	N/S	USE 6" UC/4.5" LC B-FONT
2	S. Tongass HWY	9+75	L	D3-1	36	8	2.00		E/W	USE 4" UC/3" LC B-FONT; MOUNT BELOW SIGN NO. 1
3	STOP	9+75	L	R1-1	30	30	6.25		N	
4	SPEED LIMIT 25	11+40	R	R2-1	30	36	7.50	2.5 PST	S	
5	REVERSE TURN LEFT	11+75	R	W1-3L	36	36	9.00	2.5 PST	S	
6	ADVISORY SPEED 15 MPH	11+75	R	W13-1	24	24	4.00		S	MOUNT BELOW SIGN NO. 5
7	RIGHT ARROW	14+75	L	W1-4R	36	36	9.00	2.5 PST	W	
8	ADVISORY 15 MPH	14+75	L	W13-1A	18	18	2.25		W	MOUNT BELOW SIGN NO. 7
9	Delano Rd	15+50	L	D3-1	30	8	3.50	2.5 PST	N/S	USE 4" UC/3" LC C-FONT
10	Franklin Rd	15+50	L	D3-1	42	12	3.50	2.5 PST	E/W	USE 4" UC/3" LC B-FONT; MOUNT BELOW SIGN NO. 9
11	RIGHT TURN	17+20	R	W1-1R	36	36	9.00	2.5 PST	E	
12	ADVISORY 15 MPH	17+20	R	W13-1	18	18	2.25		E	MOUNT BELOW SIGN NO. 11
	Roosevelt Drive (North)	Line "O"								
13	Franklin Rd	18+60	R	D3-1	42	12	3.50	2.5 PST	E/W	USE 6" UC/4.5" LC B-FONT
14	Roosevelt Dr	18+60	R	D3-1	36	8	2.00		N/S	USE 4" UC/3" LC C-FONT; MOUNT BELOW SIGN NO. 13
15	SPEED LIMIT 25	20+00	R	R2-1	30	36	7.50	2.5 PST	S	
16	LEFT TURN	20+70	L	W1-1L	36	36	9.00	2.5 PST	N	
17	ADVISORY 15 MPH	20+70	L	W13-1	18	18	2.25	2.5 PST	N	MOUNT BELOW SIGN NO. 38
18	Fireside Ct	22+10	L	D3-1	30	8	1.67	2.5 PST	E/W	USE 4" UC/3" LC C-FONT
19	Roosevelt Dr	22+10	L	D3-1	36	8	2.00		N/S	USE 4" UC/3" LC C-FONT; MOUNT BELOW SIGN NO. 18
20	SPEED LIMIT 25	22+60	L	R2-1	30	36	7.50	2.5 PST	N	
21	New Deal Ln	23+10	R	D3-1	36	8	2.00	2.5 PST	E/W	
22	Mayo Ln	24+00	L	D3-1	24	8	1.33	2.5 PST	E/W	USE 4" UC/3" LC C-FONT
23	Roosevelt Dr	24+00	L	D3-1	36	8	2.00		N/S	USE 4" UC/3" LC C-FONT; MOUNT BELOW SIGN NO. 22
24	Fabry Dr	25+75	L	D3-1	30	8	1.67	2.5 PST	E/W	USE 4" UC/3" LC C-FONT
25	Roosevelt Dr	25+75	L	D3-1	36	8	2.00		N/S	USE 4" UC/3" LC C-FONT; MOUNT BELOW SIGN NO. 24
26	Rebel Rd	26+75	R	D3-1	30	8	1.67	2.5 PST	E/W	USE 4" UC/3" LC C-FONT
27	Roosevelt Dr	26+75	R	D3-1	36	8	2.00		N/S	USE 4" UC/3" LC C-FONT; MOUNT BELOW SIGN NO. 26
28	Rogers Pass	35+50	R	D3-1	36	8	2.00	2.5 PST	E/W	USE 4" UC/3" LC C-FONT
29	Ravenwood Dr	37+10	L	D3-1	30	8	1.67	2.5 PST	N/S	USE 4" UC/3" LC B-FONT
30	NO PARKING ON PAVEMENT	40+75	L	R8-1	24	30	5.00	2.5 PST		
31	Springwood Ct	47+90	L	D3-1			0.00	2.5 PST		USE 4" UC/3" LC C-FONT
32	Roosevelt Dr	47+90	L	D3-1	36	8	2.00			USE 4" UC/3" LC C-FONT; MOUNT BELOW SIGN NO. 31
33	Romine Dr	52+30	L	D3-1	30	8	1.67	2.5 PST	E/W	USE 4" UC/3" LC C-FONT
34	Roosevelt Dr	52+30	L	D3-1	36	8	2.00		N/S	USE 4" UC/3" LC C-FONT; MOUNT BELOW SIGN NO. 33
35	SPEED LIMIT 25	54+80	L	R2-1	30	36	7.50	2.5 PST	N	
36	S Tongass Hwy	55+10	R	D3-1	36	8	2.00	2.5 PST	N/S	USE 4" UC/3" LC B-FONT
37	Roosevelt Dr	55+10	R	D3-1	48	12	4.00		E/W	USE 6" UC/4.5" LC B-FONT; MOUNT ABOVE SIGN NO. 36
38	STOP	55+10	R	R1-1	30	30	6.25		S/W	MOUNT BELOW SIGN NO. 64
	Roosevelt Spur (South)	Line "B"								
39	Teddy Ln	9+80	R	D3-1	30	8	1.67	2.5 PST	E/W	USE 4" UC/3" LC C-FONT
40	Jurgen Dr	10+10	L	D3-1	30	8	1.67	2.5 PST	N/S	USE 4" UC/3" LC C-FONT
41	Roosevelt Dr	10+10	L	D3-1	36	8	2.00		E/W	USE 4" UC/3" LC C-FONT
42	Anna Ct	13+50	L	D3-1	24	8	1.33	2.5 PST	S	USE 4" UC/3" LC C-FONT
43	SPEED LIMIT 20	15+80	L	R2-1	30	36	7.50	2.5 PST	E	
44	SPEED LIMIT 20	15+75	R	R2-1	30	36	7.50	2.5 PST	W	
45	Waggoner Dr	16+40	L	D3-1	36	8	2.00	2.5 PST	E/W	USE 4" UC/3" LC C-FONT
46	LEFT ARROW	20+90	R	W1-4L	36	36	9.00	2.5 PST	W	
47	ADVISORY 15 MPH	20+90	R	W13-1A	18	18	2.25		W	MOUNT BELOW SIGN NO. 46
48	McColey Rd	21+40	L	D3-1	36	8	2.00	2.5 PST	E/W	USE 4" UC/3" LC C-FONT
49	Three C's Ln	22+40	R	D3-1	36	8	2.00	2.5 PST	E/W	USE 4" UC/3" LC C-FONT
50	Roosevelt Dr	22+40	R	D3-1	36	8	2.00		N/S	USE 4" UC/3" LC C-FONT; MOUNT BELOW SIGN NO. 49
51	RIGHT ARROW	25+00	L	W1-4R	36	36	9.00	2.5 PST	N	
52	ADVISORY 15 MPH	25+00	L	W13-1A	18	18	2.25		N	MOUNT BELOW SIGN NO. 51
53	Dotson Ln	25+50	R	D3-1	30	8	1.67	2.5 PST	E/W	USE 4" UC/3" LC C-FONT
54	Roosevelt Dr	25+50	R	D3-1	36	8	2.00		N/S	USE 4" UC/3" LC C-FONT; MOUNT BELOW SIGN NO. 53
55	Churchill Ct	28+60	R	D3-1	36	8	2.00	2.5 PST	E/W	USE 4" UC/3" LC C-FONT
56	Yankee Dr	29+70	R	D3-1	30	8	1.67	2.5 PST	E/W	USE 4" UC/3" LC C-FONT
57	Roosevelt Dr	29+70	R	D3-1	36	8	2.00		N/S	USE 4" UC/3" LC C-FONT; MOUNT BELOW SIGN NO. 56
58	OBJECT MARKER	34+58	L	OM-3L	12	36	3.00	2.5 PST	S	
59	OBJECT MARKER	34+64	R	OM-3R	12	36	3.00	2.5 PST	S	
60	WEIGHT LIMIT		L	R12-1					S	EXISTING SIGN TO REMAIN (DO NOT DISTURB)
61	Forks Creek	34+67	R	I-3	48	36	12.00	2.5 PST	S	USE 8" UC / 6" LC E-MOD FONT
62	OBJECT MARKER	34+95	L	OM-3R	12	36	3.00	2.5 PST	N	
63	OBJECT MARKER	35+05	R	OM-3L	12	36	3.00	2.5 PST	N	
64	Forks Creek	34+90	L	I-3	48	36	12.00	2.5 PST	N	USE 8" UC / 6" LC E-MOD FONT
65	WEIGHT LIMIT		R	R12-1					N	EXISTING SIGN TO REMAIN (DO NOT DISTURB)
66	SPEED LIMIT 20	35+80	L	R2-1	30	36	7.50	2.5 PST	N	
67	STOP	37+13	R	R1-1	30	30	6.25	2.5 PST	S	
						TOTAL	255.17	Sq.Ft.		

253.3 FT²

NOTE:
D3-1 SERIES SIGNS ARE DOUBLE SIDED

615(6) SALVAGE SIGN

SALVAGE SIGNS ALONG LINE "O" AND LINE "B"
WHERE NEW REPLACES EXISTING, AND THE FOLLOWING:

LEGEND	STA	LINE	ASDS CODE
LEFT CURVE	48+40 L	O	W1-4L
ADVISORY 20 MPH	48+40 L	O	W13-1
RIGHT CURVE	53+50 L	O	W1-4R
ADVISORY 20 MPH	53+50 L	O	W13-1
James Ct.	16+18 R	B	D3-1
Roosevelt Dr	16+18 R	B	D3-1

0.00

STATE OF ALASKA 49TH James Brown 14083 REGISTERED PROFESSIONAL ENGINEER

STATE OF ALASKA DEPARTMENT OF TRANSPORTATION AND PUBLIC FACILITIES
6860 GLACIER HIGHWAY, JUNEAU, AK 99811
(907)465-1763

KTN ROOSEVELT DRIVE & FRANKLIN ROAD PAVEMENT REHABILITATION

SUMMARIES

FILE Q:\Ktn\68663\EN\Dwgs\Sheets\68663_D1_SUMMARIES.dwg | DATE 8/15/2016 8:49 | LAYOUT D2 | DESIGNED DD | CHECKED JB, LC | DRAFTED DD, JT

HMF 3.18.20

NO.	DATE	REVISION	STATE	PROJECT DESIGNATION	YEAR	SHEET NO.	TOTAL SHEETS
			ALASKA	Z686630000	2016	D3	55

639(3) DRIVEWAY APPROACH

STA.	OFFSET	WIDTH FRONT	WIDTH BACK	RADIUS R1	RADIUS R2	DEPTH	REMARKS
Franklin Road		Line "O"					
11+20	LT	43.7	19.0	5	-	15	House 13 (SEE SHEET G1)
12+50	RT	41.8	23.6	10	10	10	House 44
13+09	RT	30.8	14.0	10	10	10	House 56
13+93	RT	30.8	13.9	10	10	10	House 70
15+00	RT	40.5	20.0	10	10	10	House 92 & 94
15+17	LT	37.4	18.0	10	10	10	House 67
16+34	RT	28.5	8.5	10	10	10	House 132
16+97	LT	36.7	16.7	10	10	10	House 153
17+00	RT	37.3	17.3	10	10	10	House 132
17+59	RT	39.4	19.3	10	10	10	House 142
17+92	LT	35.0	16.4	10	10	10	House 153
Roosevelt Drive (North)		Line "O"					
18+92	LT	34.3	14.0	10	10	10	Mountain Point water booster station
20+80	RT	42.5	23.5	10	10	10	House 6274
24+26	RT	40.7	20.0	10	10	10	House 6314
24+84	RT	36.7	17.1	10	10	10	House 6352
27+55	RT	43.7	23.7	10	10	10	House 6382
29+45	RT	40.7	20.0	10	10	10	House 6442
29+85	LT	37.1	17.1	25	10	10	House 6455
30+45	RT	31.9	11.9	10	10	10	House 6442
30+63	LT	39.9	20.0	10	10	10	House 6455 garage
31+20	RT	32.7	12.7	10	10	10	House 6460
31+64	LT	34.9	14.9	10	10	10	House 6475 & 6477
32+04	RT	39.9	20.0	10	10	10	House 6482
32+84	RT	38.6	18.6	10	10	10	House 6482
34+67	RT	34.1	14.0	10	10	10	House 6522
34+63	LT	44.5	25.0	10	10	10	House 6525
35+82	RT	39.9	20.0	10	10	10	House 6560
36+91	RT	34.9	14.9	10	10	10	House 6578
38+44	LT	45.9	25.9	10	10	10	6615
39+34	RT	43.7	23.7	10	10	10	House 6652
39+36	LT	45.7	25.8	10	10	10	6615
39+77	LT	35.5	15.5	10	10	10	6633 5-star muffler
42+03	LT	39.6	20.0	10	10	10	House 6663
43+45	LT	39.9	20.0	10	10	10	House 6691
43+51	RT	37.3	17.3	10	10	10	6716 gate
44+37	LT	34.1	14.0	10	10	10	House 6695
44+65	RT	45.5	25.5	10	10	10	6716 & 6732 gate
45+77	RT	40.6	20.0	10	10	10	6732 gate
45+89	LT	44.7	24.7	10	10	10	House 6739
48+74	RT	40.0	20.0	10	10	10	House 6804
49+23	LT	37.5	17.5	10	10	10	House 6823 garage
54+05	LT	39.9	20.0	10	10	10	House 6899
55+22	LT	41.9	24.2	10	10	10	House 6939

C.O.#2
Establish new Item: 627(10) Replace & Adjust Water Valve Boxes

639(3) DRIVEWAY APPROACH

STA.	OFFSET	WIDTH FRONT	WIDTH BACK	RADIUS R1	RADIUS R2	DEPTH	REMARKS
Roosevelt Spur (South)		Line "B"					
11+10	RT	40.8	20.0	10	10	10	House 5738 & 5740
11+19	LT	31.2	12.0	10	10	10	House 5725
12+05	LT	40.1	20.0	10	10	10	House 5729
14+34	RT	34.0	14.0	10	10	10	House 5786
14+85	RT	40.0	20.0	10	10	10	House 5802
16+80	LT	40.1	20.0	10	10	10	House 5847
17+19	RT	41.1	21.1	10	10	10	House 5860
17+63	RT	33.9	13.7	10	10	10	House 5860
19+01	LT	34.0	14.0	10	10	10	House 5891
20+36	LT	36.3	16.3	10	10	10	House 5895
20+57	RT	35.4	15.4	10	10	10	House 5932
21+84	LT	34.6	13.5	10	10	10	House 5943
23+23	RT	37.6	20.0	10	10	10	House 5954
23+77	RT	37.0	20.0	10	10	10	House 5972
24+76	LT	39.0	20.0	10	10	10	House 5991
25+45	LT	38.5	19.7	10	10	10	House 6005
26+20	LT	31.0	11.9	10	10	10	House 6005 side
26+73	LT	30.3	10.7	10	10	10	AK D.N.R. gated access
27+28	RT	25.9	20.0	10	10	10	House 6032 & 6040
27+22	LT	34.0	14.1	10	10	10	House 6043 garage
30+54	LT	40.0	20.0	10	10	10	House 6097
31+12	RT	61.0	42.3	10	10	10	House 6096 & 6114
31+18	LT	40.3	20.0	10	10	10	House 6115
31+55	RT	28.3	10.4	10	10	10	House 6114 side
32+07	RT	30.8	12.2	10	10	10	Trail to 6100 BLK S.Tongaas
34+54	RT						House 6146, grade road edge, not paved
36+77	LT	32.6	14.0	10	10	10	AK DNR trail

639(3) ROAD APPROACH

STA. (Center)	OFFSET	WIDTH FRONT	WIDTH BACK	RADIUS R1	RADIUS R2	DEPTH	REMARKS
Franklin Road		Line "O"					
15+63	LT.	33.4	14.0	10	10	10	DELANO RD.
Roosevelt Drive (North)		Line "O"					
21+80	LT.	49.5	29.5	10	10	10	FIRESIDE CT.
22+79	RT.	44.0	23.9	10	10	10	NEW DEAL LN.
23+63	LT.	54.8	17.2	55	4	10*	MAYO LN. *Curved approach
25+97	LT.	57.4	24.3	30*	15	10	FABRY DR. *R1 has 6' tangent
26+45	RT.	53.1	23.1	15	15	15	REBEL RD.
35+37	RT.	42.7	17.3	15	15	15	ROGERS PASS
36+75	LT.	61.2	31.2	15	15	15	RAVENWOOD DR. (match existing paved
36+91	RT.						VISTA DR. (DO NOT RECONSTRUCT)
47+77	LT.	41.7	23.7	10	11	10	SPRINGWOOD CT.
52+57	LT.	55.0	24.7	15	15	15	ROMINE DR.
Roosevelt Spur (South)		Line "B"					
13+29	LT.	36.6	17.9	10	10	10	ANNA CT.
16+04	RT.						JAMES CT. (DO NOT RECONSTRUCT)
16+31	LT.	41.9	22.8	10	10	10	WAGGONER RD.
21+24	LT.	40.0	20.0	10	10	10	McCOLEY RD.
22+31	RT.	51.1	22.2	15	15*	15	THREE Cs LN. *R2 has 13' tangent
25+26	RT.	59.7	24.3	15	15*	15	DOTSON LN. *R2 has 10' tangent
28+84	RT.	51.8	22.1	15	15	15	CHURCHILL CT.
29+81	LT.	33.6	13.9	10	10	10	YANKEE DR.

89.0 Each Approach

STATE OF ALASKA 49TH James Brown 14083 REGISTERED PROFESSIONAL ENGINEER

STATE OF ALASKA DEPARTMENT OF TRANSPORTATION
AND PUBLIC FACILITIES
6860 GLACIER HIGHWAY, JUNEAU, AK 99811
(907)465-1763

KTN ROOSEVELT DRIVE &
FRANKLIN ROAD
PAVEMENT REHABILITATION

SUMMARIES

FILE Q:\Ktn\68663\EN\Dwgs\Sheets\68663_D1_SUMMARIES.dwg
DATE 8/15/2016 8:49
LAYOUT D3
DESIGNED DD
CHECKED JB, LC
DRAFTED DD, JT

HMF 318.20

NO.	DATE	REVISION	STATE	PROJECT DESIGNATION	YEAR	SHEET NO.	TOTAL SHEETS
			ALASKA	Z686630000	2016	E1	55

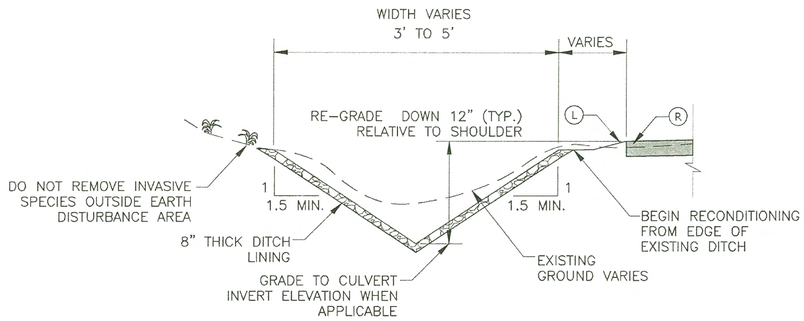

1 / E1 DITCH RECONDITIONING
SCALE: N.T.S.

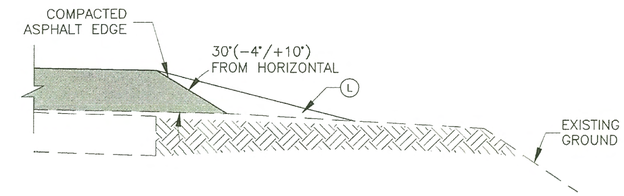

3 / E1 SAFETY EDGE
SCALE: N.T.S.

NOTE:

1. DO NOT USE A SAFETY EDGE WHERE THERE WILL BE A JOINT (CENTERLINE, INTERSECTIONS, DRIVEWAYS, ETC.).

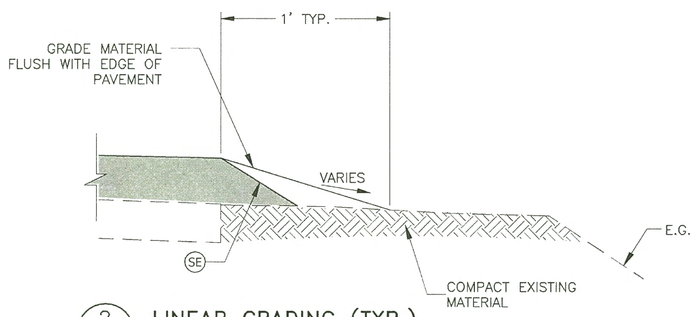

2 / E1 LINEAR GRADING (TYP.)
SCALE: N.T.S.

NOTE:

1. LINEAR GRADING SHALL MEET THE REQUIREMENTS AS SPECIFIED IN SECTION 303 OF THE SPECIAL PROVISIONS.

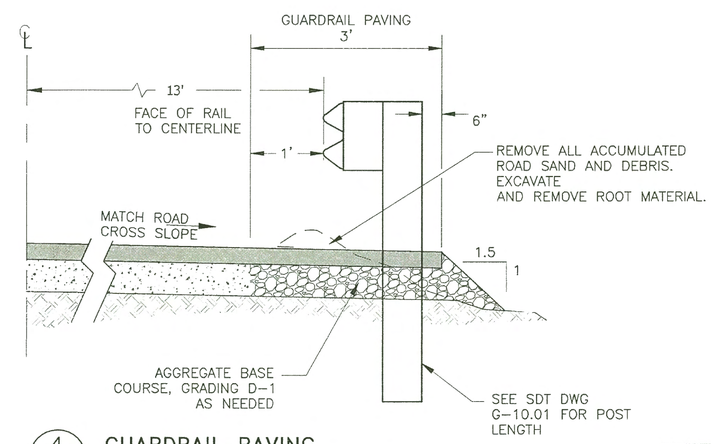

4 / E1 GUARDRAIL PAVING
SCALE: N.T.S.

NOTE:

1. LINEAR GRADING NOT USED IN CONJUNCTION WITH GUARDRAIL PAVING.

LEGEND

- (L) LINEAR GRADING
- (R) 2" HMA, TYPE II; CLASS B,
- (TC) STE−1 TACK COAT
- (AG) 8" AGGREGATE BASE COURSE, GRADING D−1
- (SE) SAFETY EDGE

STATE OF ALASKA 49TH James Brown 14083 REGISTERED PROFESSIONAL ENGINEER

STATE OF ALASKA DEPARTMENT OF TRANSPORTATION AND PUBLIC FACILITIES
6860 GLACIER HIGHWAY, JUNEAU, AK 99811
(907)465−1763

KTN ROOSEVELT DRIVE & FRANKLIN ROAD PAVEMENT REHABILITATION

MISC−DETAILS

FILE Q:\Ktn\68663\EN\Dwgs\Sheets\68663_E1-E4_MISC-DETAILS.dwg | DATE 8/15/2016 11:20 | LAYOUT E1 | DESIGNED DD | CHECKED JB, LC | DRAFTED DD, JT

HMF 3-18-20

NO.	DATE	REVISION	STATE	PROJECT DESIGNATION	YEAR	SHEET NO.	TOTAL SHEETS
			ALASKA	Z686630000	2016	E2	55

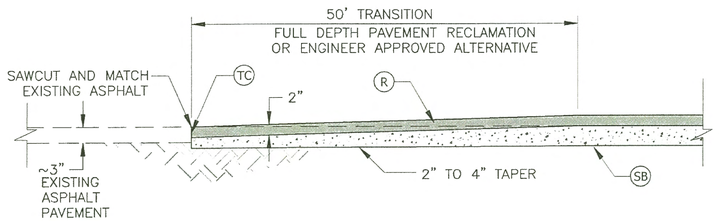

1 / E2 PAVEMENT TRANSITION
SCALE: N.T.S. STA. 9+28 LINE "O" (BOP)
STA. 56+44 LINE "O" (EOP)

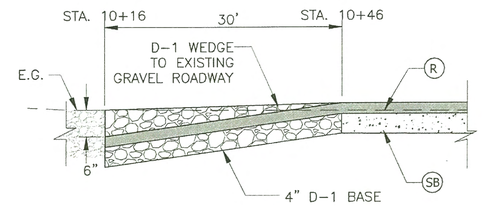

2 / E2 PAVEMENT TO GRAVEL TRANSITION
SCALE: N.T.S. LINE "B" (BOP)

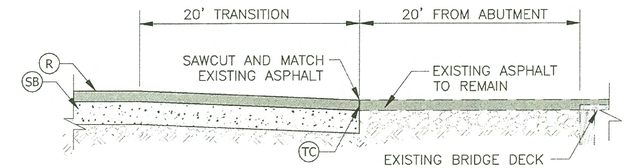

1 / E2 BRIDGE TRANSITION
SCALE: N.T.S.

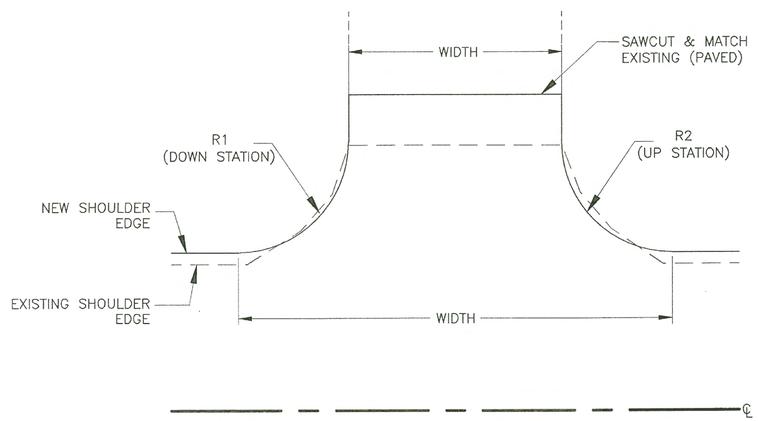

4 / E2 PAVED APPROACH – PLAN VIEW
SCALE: N.T.S.

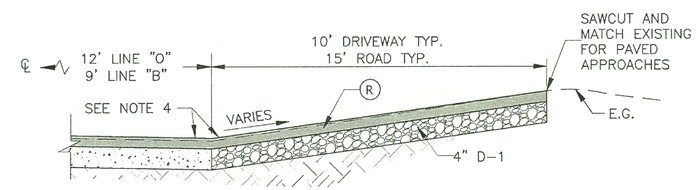

4A / E2 PAVED APPROACH – PROFILE VIEW
SCALE: N.T.S. SEE SHEET D3 FOR DIMENSIONS

PAVED APPROACH NOTES:

1. LENGTH OF PAVING 10' TO 15' (TYP.) BACK FROM EDGE OF PAVEMENT. SEE SHEET D3.
2. WIDTH OF DRIVEWAY VARIES. SEE DRIVE & ROAD APPROACH SUMMARY ON SHEET D3.
3. RADIUS VARIES, ESTIMATED RADIUS IS IN APPROACH SUMMARY ON SHEET D3. ADJUST RADIUS TO MATCH EXISTING RADIUS.
4. SMOOTH WITH A VERTICAL CURVE. VERTICAL CURVES SHALL NOT HAVE HUMPS OR DEPRESSIONS THAT EXCEED 3 ½" IN A 10' CORD.

LEGEND

- (L) LINEAR GRADING
- (R) 2" HMA, TYPE II; CLASS B,
- (TC) STE-1 TACK COAT
- (SE) SAFETY EDGE
- (SB) 4" CRUSHED ASPHALT BASE COURSE

STATE OF ALASKA 49TH James Brown 14083 REGISTERED PROFESSIONAL ENGINEER

STATE OF ALASKA DEPARTMENT OF TRANSPORTATION
AND PUBLIC FACILITIES
6860 GLACIER HIGHWAY, JUNEAU, AK 99811
(907)465-1763

KTN ROOSEVELT DRIVE &
FRANKLIN ROAD
PAVEMENT REHABILITATION

MISC-DETAILS

FILE Q:\Ktn\68663\ENDwgs\Sheets\68663_E1-E4_MISC-DETAILS.dwg
DATE 8/15/2016 11:20
LAYOUT E2
DESIGNED DD
CHECKED JB, LC
DRAFTED DD, JT

HMF 3.18.20

NO.	DATE	REVISION	STATE	PROJECT DESIGNATION	YEAR	SHEET NO.	TOTAL SHEETS
			ALASKA	Z686630000	2016	E3	55

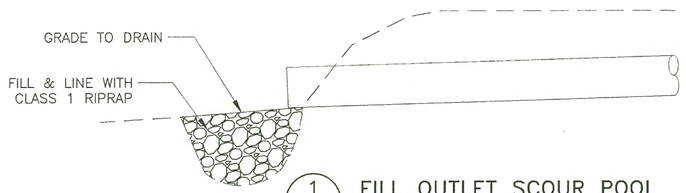

1 / E3 FILL OUTLET SCOUR POOL
SCALE: N.T.S.

STA. 16+07 "O"
43+12 "O"
48+00 "O"
26+16 "B"
30+06 "B"

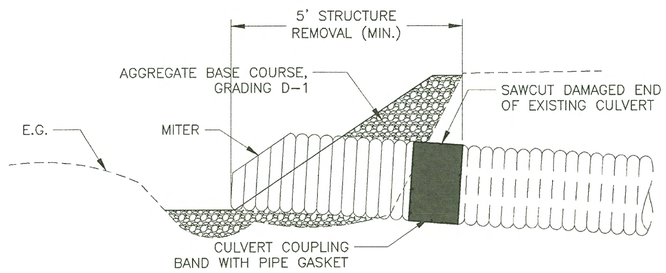

2 / E3 RECONSTRUCT OUTLET
SCALE: N.T.S.

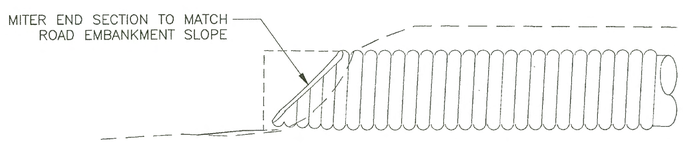

3 / E3 MITER CULVERT
SCALE: N.T.S.

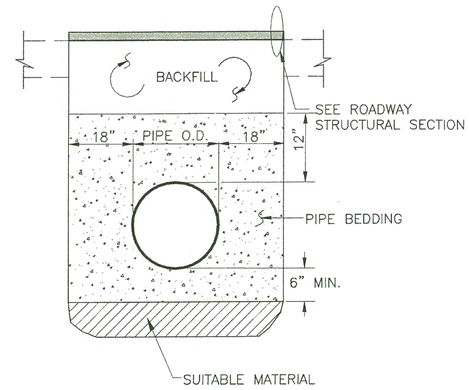

4 / E3 CULVERT BEDDING/BACKFILL DETAIL
SCALE: N.T.S.

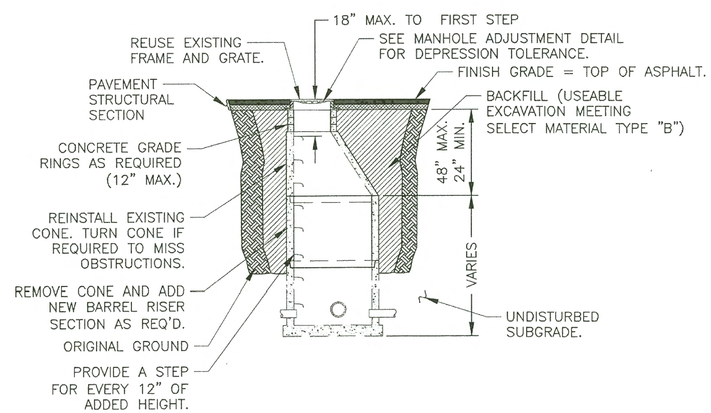

5 / E3 MANHOLE RECONSTRUCTION DETAIL
SCALE: N.T.S.

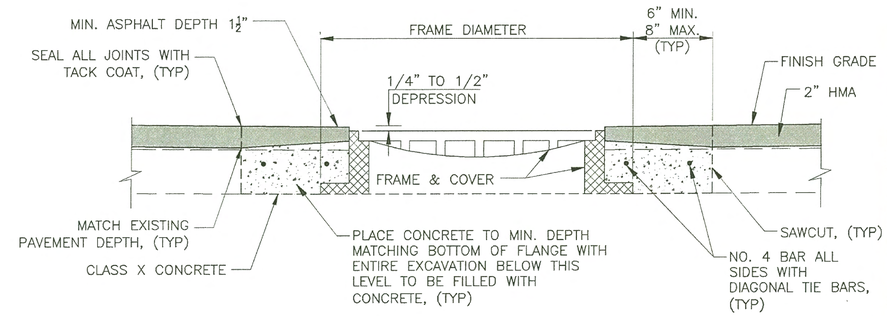

6 / E3 MANHOLE ADJUSTMENT DETAIL
SCALE: N.T.S.

MANHOLE:

1. THIS CONCRETE COLLAR WILL NOT BE REQUIRED IF DEPRESSION TO COVER LUGS OR FRAME, WHICHEVER IS HIGHER, MEETS THE REQUIRED DEPRESSION RANGE FOLLOWING THE FINISH PAVING OPERATIONS.
2. CONCRETE SHALL CURE FOR 72 HOURS MINIMUM, OR REACHED 3200 PSI, BEFORE PLACING PAVEMENT.

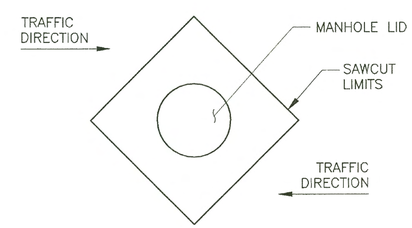

6A / E3 MANHOLE ADJUSTMENT DETAIL – PLAN VIEW
SCALE: N.T.S.

STATE OF ALASKA 49TH
James Brown
14083
REGISTERED PROFESSIONAL ENGINEER

STATE OF ALASKA DEPARTMENT OF TRANSPORTATION AND PUBLIC FACILITIES
6860 GLACIER HIGHWAY, JUNEAU, AK 99811
(907)465-1763

KTN ROOSEVELT DRIVE & FRANKLIN ROAD PAVEMENT REHABILITATION

MISC-DETAILS

FILE Q:\Ktn\68663\END\dwgs\Sheets\68663_E1-E4_MISC-DETAILS.dwg
DATE 8/15/2016 11:20 LAYOUT E3 DESIGNED DD CHECKED JB, LC DRAFTED DD, JT

HMF 3.18.20

NO.	DATE	REVISION	STATE	PROJECT DESIGNATION	YEAR	SHEET NO.	TOTAL SHEETS
			ALASKA	Z686630000	2016	E4	55

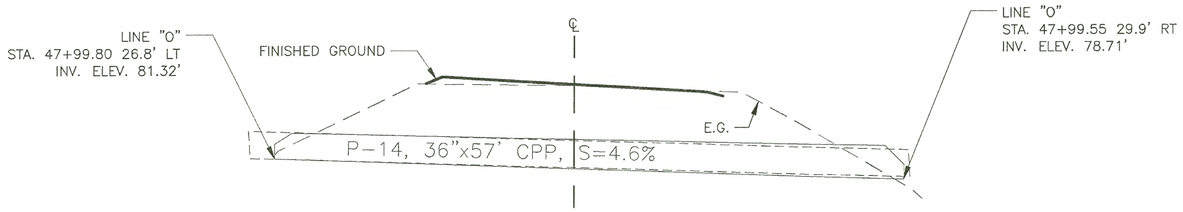

1 / E4 CULVERT DETAIL P-14
SCALE: N.T.S.

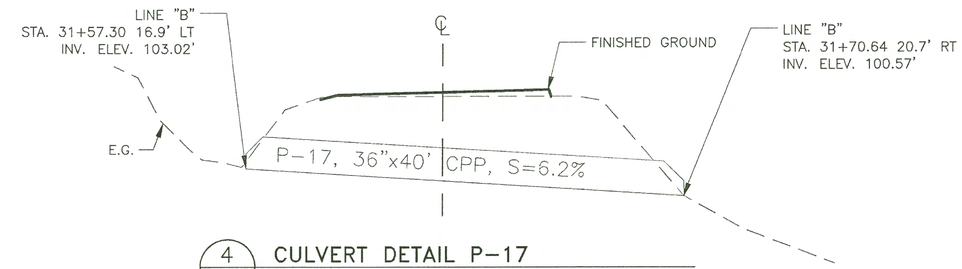

4 / E4 CULVERT DETAIL P-17
SCALE: N.T.S.

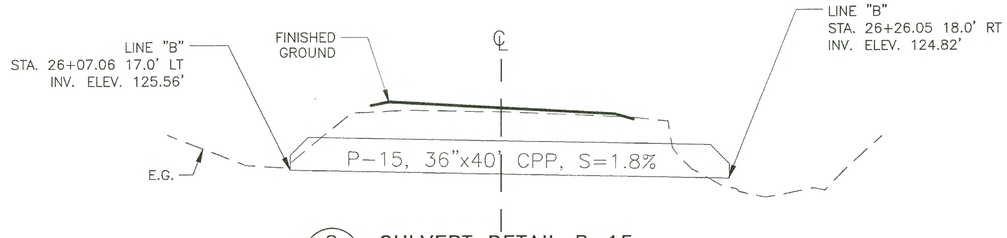

2 / E4 CULVERT DETAIL P-15
SCALE: N.T.S.

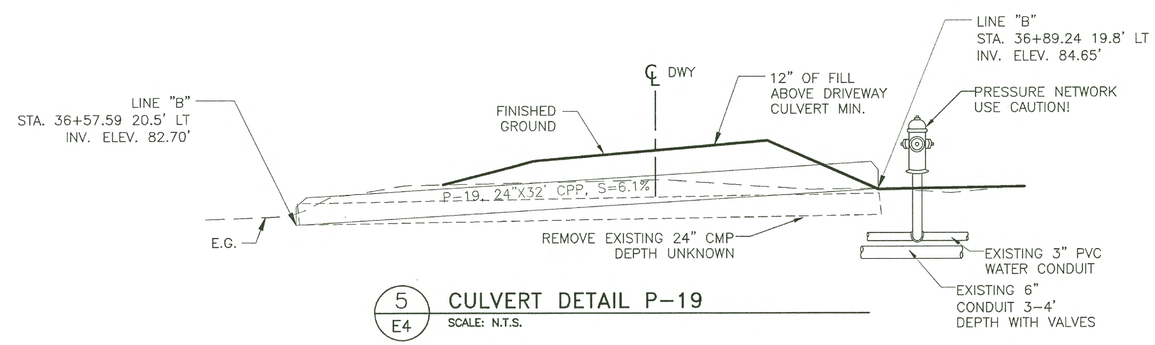

5 / E4 CULVERT DETAIL P-19
SCALE: N.T.S.

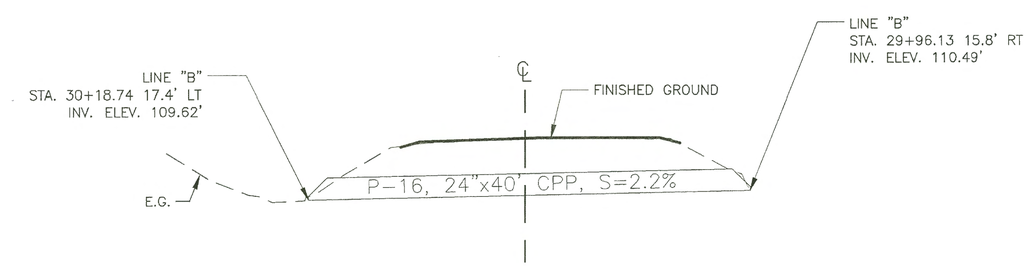

3 / E4 CULVERT DETAIL P-16
SCALE: N.T.S.

NOTE:

1. EXACT LOCATION OF EXISTING UTILITIES UNKNOWN. CONTRACTORS RESPONSIBILITY TO LOCATE AND VERIFY.
2. MITER CULVERT END SECTIONS PER DETAIL 3, SHEET E3.

STATE OF ALASKA 49TH James Brown 14083 REGISTERED PROFESSIONAL ENGINEER

STATE OF ALASKA DEPARTMENT OF TRANSPORTATION AND PUBLIC FACILITIES
6860 GLACIER HIGHWAY, JUNEAU, AK 99811
(907)465-1763

KTN ROOSEVELT DRIVE & FRANKLIN ROAD PAVEMENT REHABILITATION

MISC-DETAILS

FILE Q:\Ktn\68663\EN\Dwgs\Sheets\68663_E1-E4_MISC-DETAILS.dwg | DATE 8/15/2016 11:20 | LAYOUT E4 | DESIGNED DD | CHECKED JB, LC | DRAFTED DD, JT

HMF 3.18.20

NO.	DATE	REVISION	STATE	PROJECT DESIGNATION	YEAR	SHEET NO.	TOTAL SHEETS
			ALASKA	Z686630000	2016	F1	55

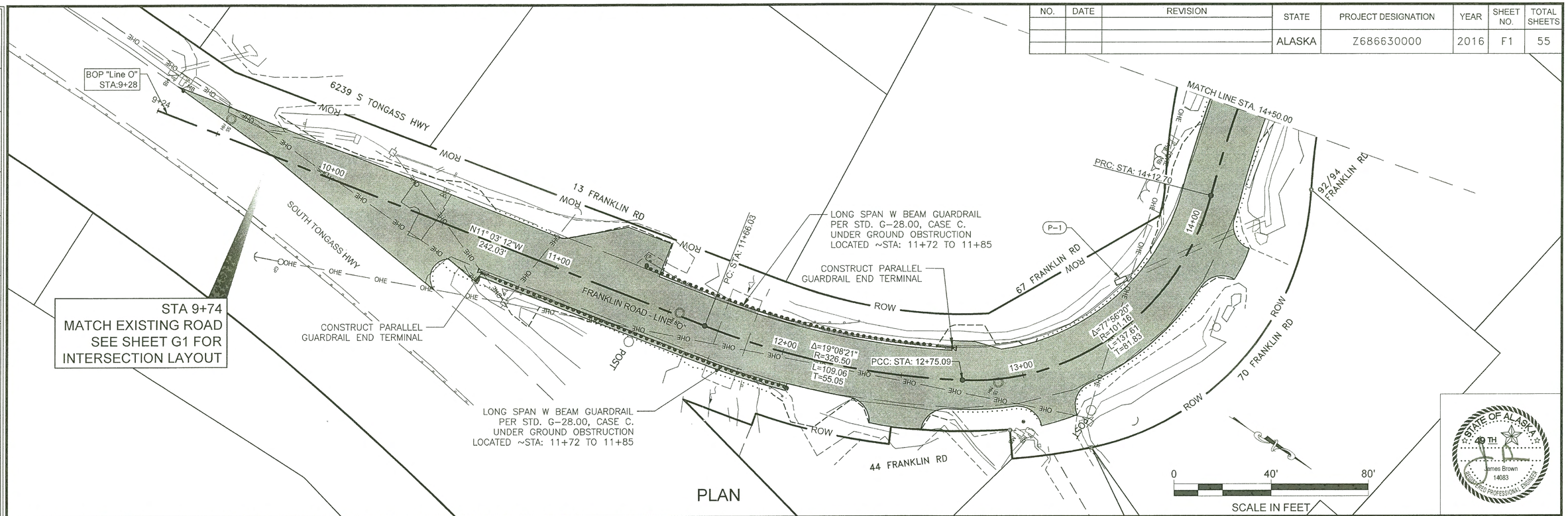

PLAN

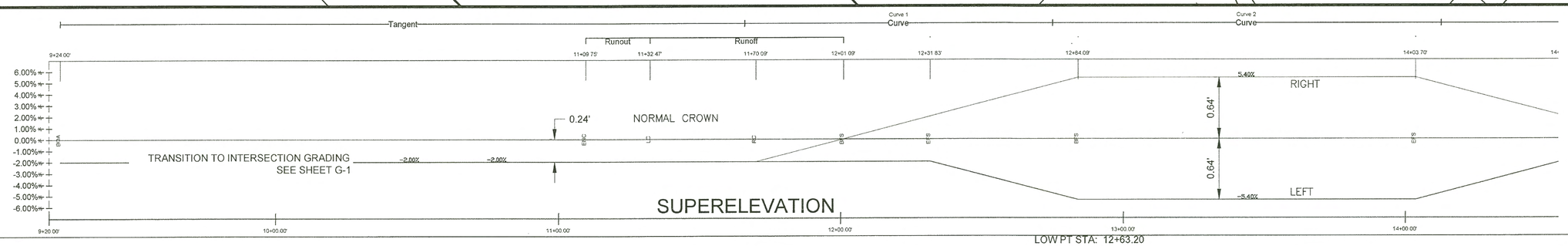

SUPERELEVATION

NOTE: DIMENSIONS LABELED ARE FROM CENTERLINE ELEVATION TO EDGE OF PAVEMENT.

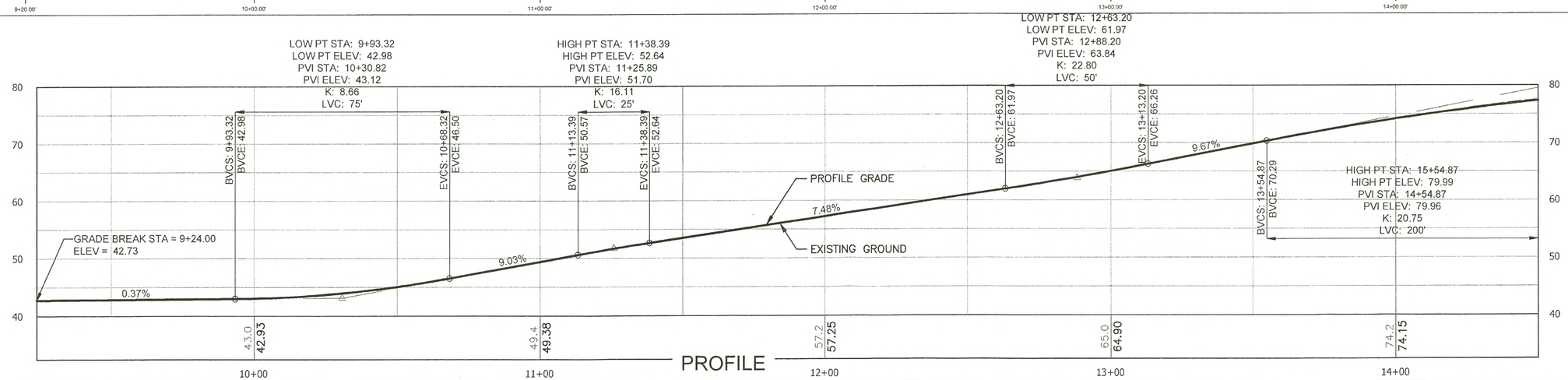

PROFILE

DATE 8/15/2016 11:02 | LAYOUT F1 | DESIGNED DD | CHECKED JB, LC | DRAFTED DD, JT

FILE Q:\Ktn\68663\EN\Dwgs\Sheets\68663_F1-F15_PLAN & PROFILE.dwg

HMF 3.18.20

NO.	DATE	REVISION

STATE	PROJECT DESIGNATION	YEAR	SHEET NO.	TOTAL SHEETS
ALASKA	Z686630000	2016	F2	55

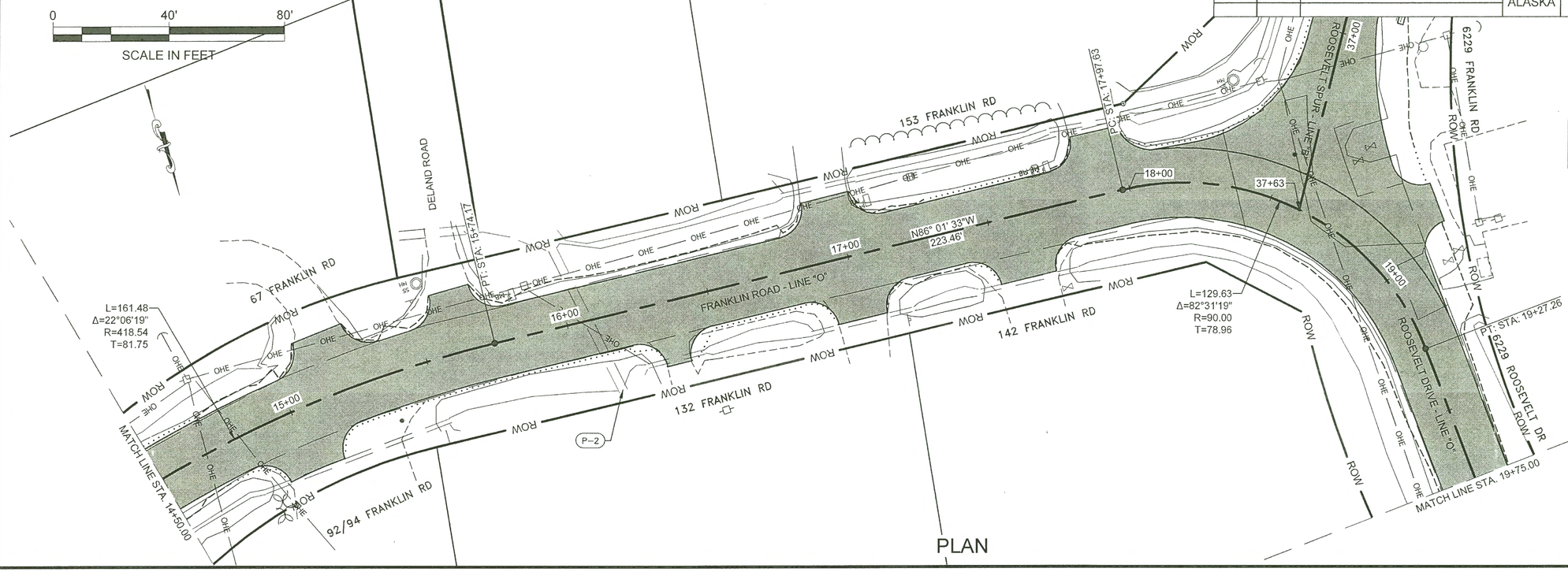

SEE SHEET G2 FOR INTERSECTION LAYOUT

PLAN

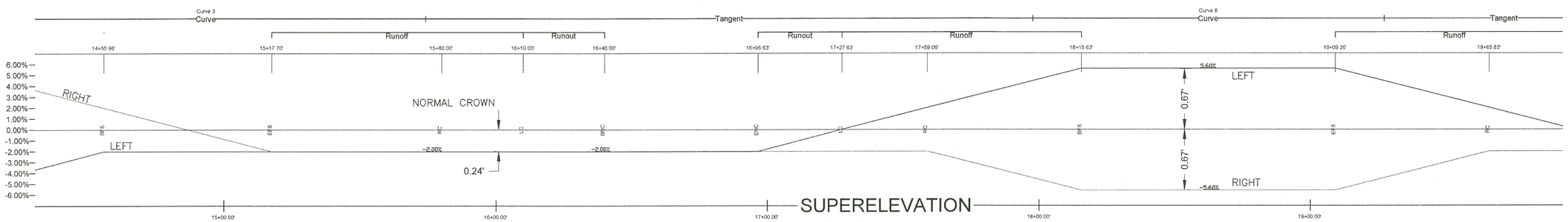

SUPERELEVATION

NOTE: DIMENSIONS LABELED ARE FROM CENTERLINE ELEVATION TO EDGE OF PAVEMENT.

HIGH PT STA: 15+54.87
HIGH PT ELEV: 79.99
PVI STA: 14+54.87
PVI ELEV: 79.96
K: 20.75
LVC: 200'

LOW PT STA: 16+11.51
LOW PT ELEV: 80.01
PVI STA: 16+74.01
PVI ELEV: 80.03
K: 60.83
LVC: 125'

LOW PT STA: 18+66.72
LOW PT ELEV: 84.05
PVI STA: 19+66.72
PVI ELEV: 86.14
K: 213.01
LVC: 200'

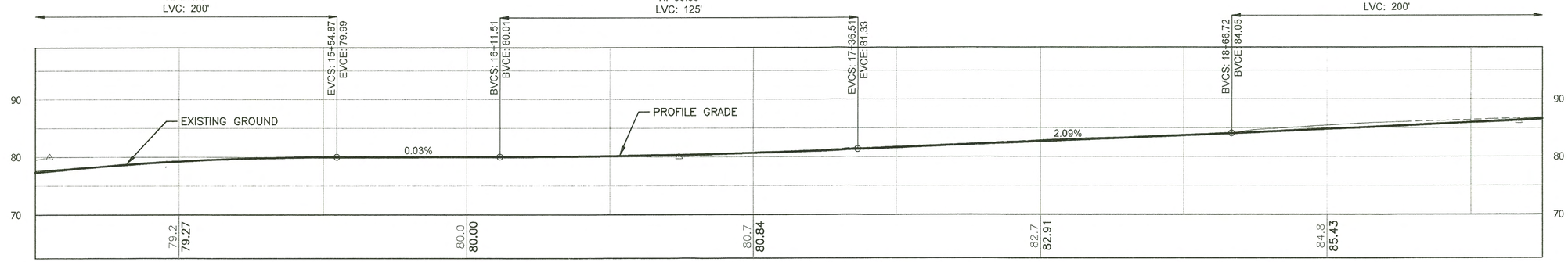

PROFILE

STATE OF ALASKA
49 TH
James Brown
14083
REGISTERED PROFESSIONAL ENGINEER

DATE 8/15/2016 11:02 | LAYOUT F2 | DESIGNED DD | CHECKED JB, LC | DRAFTED DD, JT

FILE Q:\Kiln\68663\EN\Dwgs\Sheets\68663_F1-F15_PLAN & PROFILE.dwg

HMF 3-18-20

NO.	DATE	REVISION

STATE	PROJECT DESIGNATION	YEAR	SHEET NO.	TOTAL SHEETS
ALASKA	Z686630000	2016	F3	55

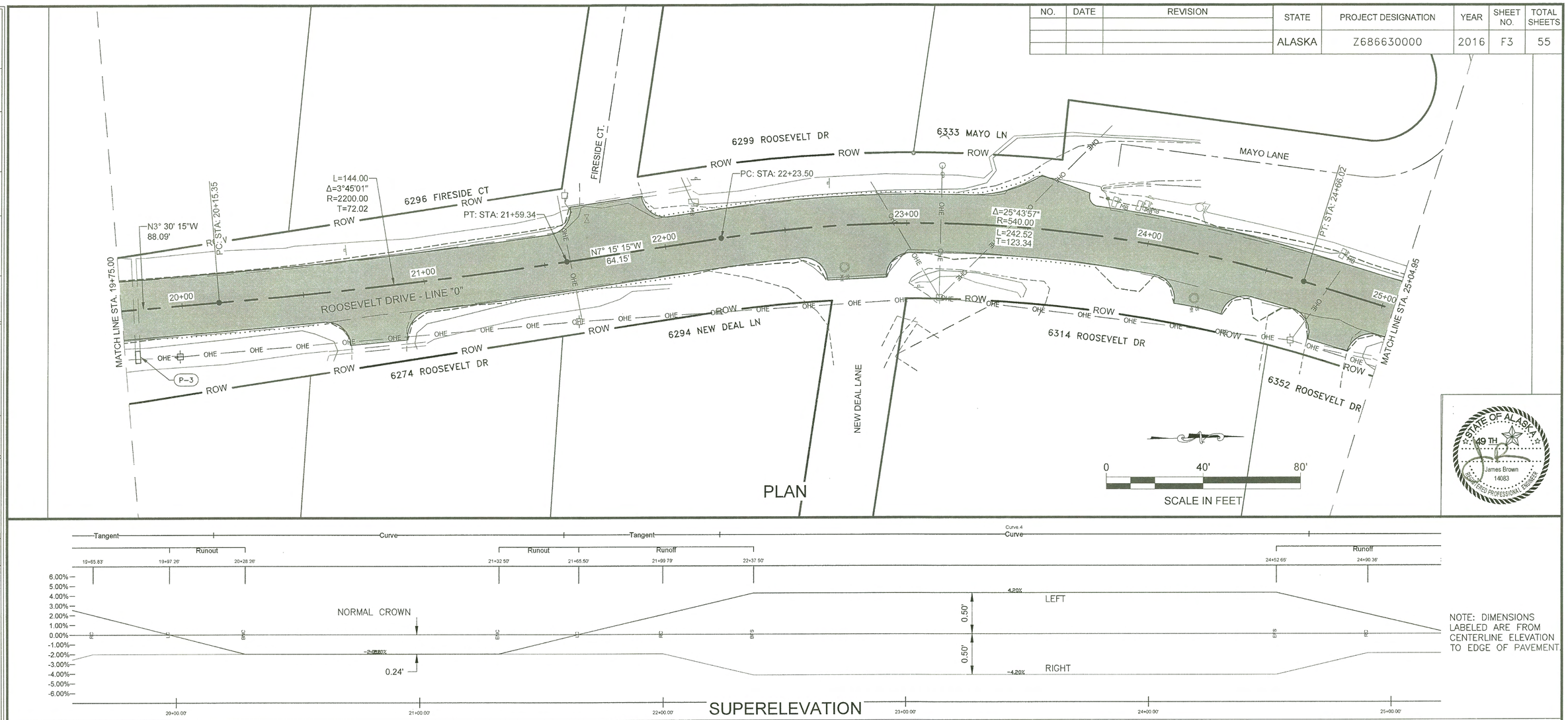

NOTE: DIMENSIONS LABELED ARE FROM CENTERLINE ELEVATION TO EDGE OF PAVEMENT.

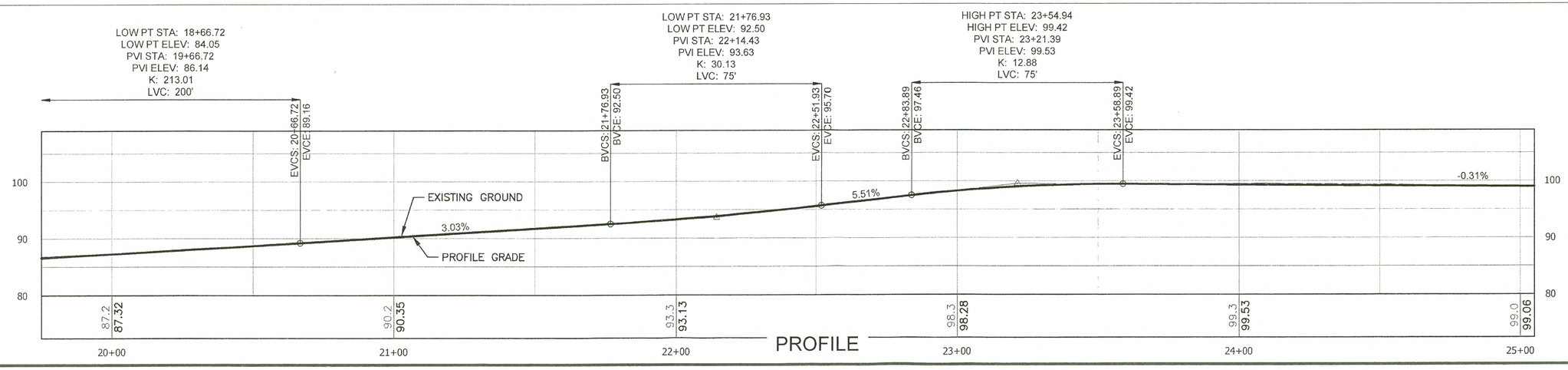

STATE OF ALASKA
49 TH
James Brown
14083
REGISTERED PROFESSIONAL ENGINEER

FILE | Q:\Ktn\68663\EN\Dwgs\Sheets\68663_F1-F15_PLAN & PROFILE.dwg
DATE | 8/15/2016 11:02
LAYOUT | F3
DESIGNED | DD
CHECKED | JB, LC
DRAFTED | DD, JT

HMF 3-18-20

NO.	DATE	REVISION	STATE	PROJECT DESIGNATION	YEAR	SHEET NO.	TOTAL SHEETS
			ALASKA	Z686630000	2016	F4	55

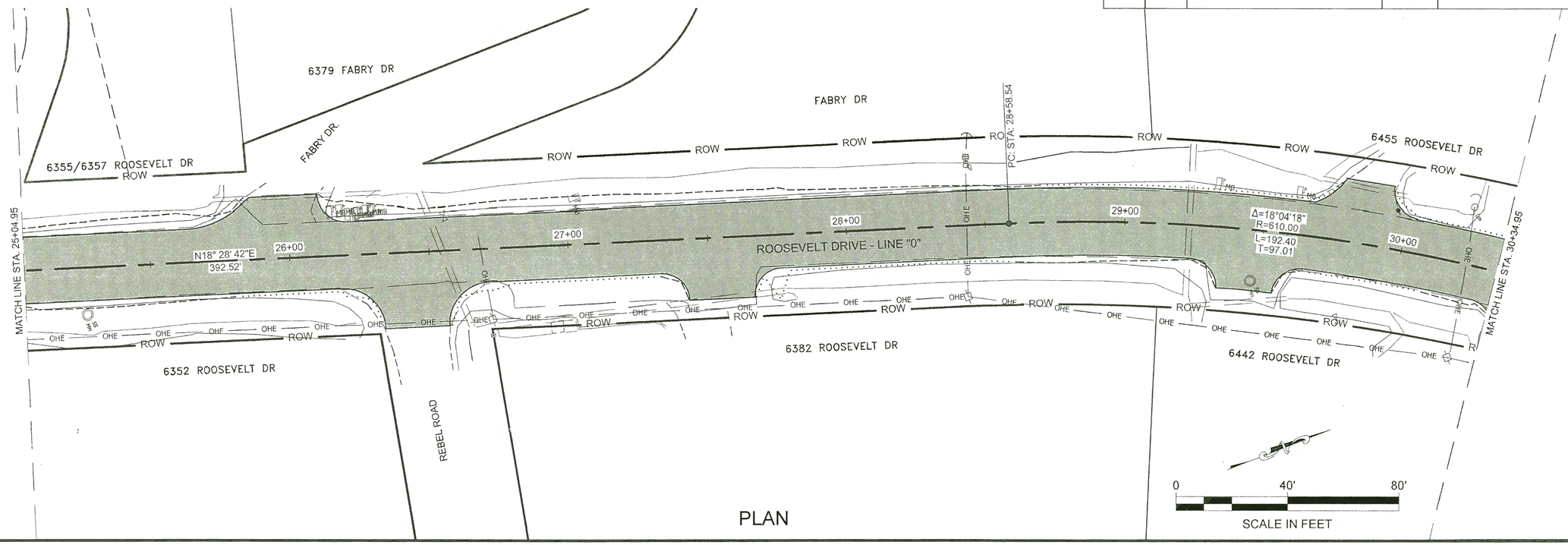

PLAN

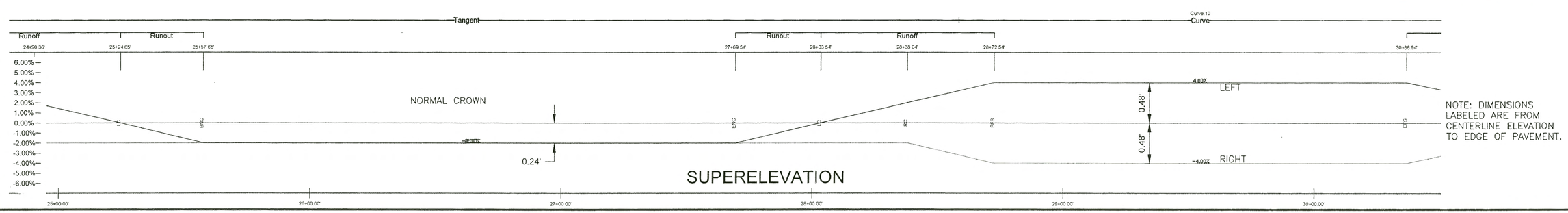

NOTE: DIMENSIONS LABELED ARE FROM CENTERLINE ELEVATION TO EDGE OF PAVEMENT.

SUPERELEVATION

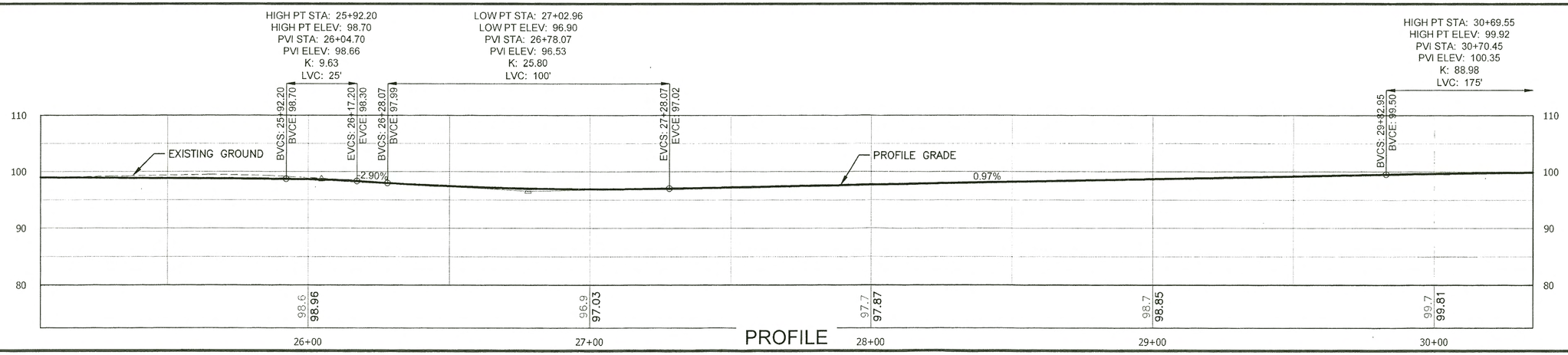

PROFILE

FILE Q:\Kin\66663\EN\Dwgs\Sheets\66663_F1-F15_PLAN & PROFILE.dwg | DATE 8/15/2016 11:02 | LAYOUT F4 | DESIGNED DD | CHECKED JB, LC | DRAFTED DD, JT

HMF 3.18.20

NO.	DATE	REVISION	STATE	PROJECT DESIGNATION	YEAR	SHEET NO.	TOTAL SHEETS
			ALASKA	Z686630000	2016	F5	55

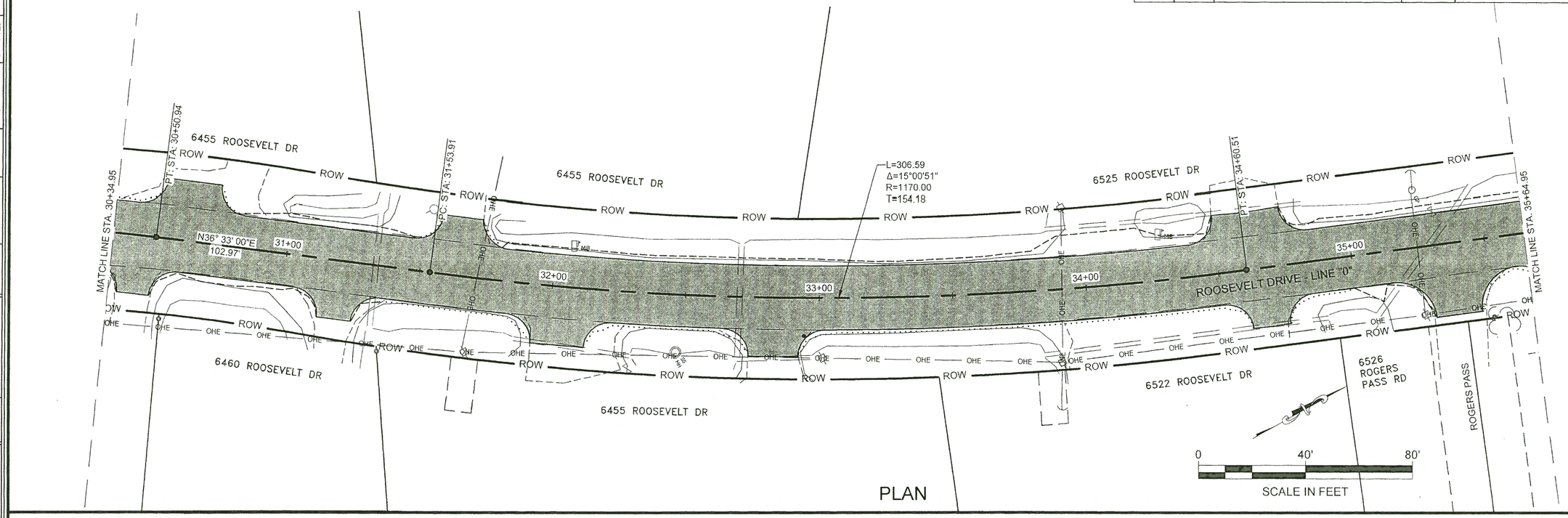

PLAN

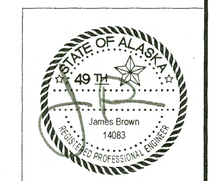

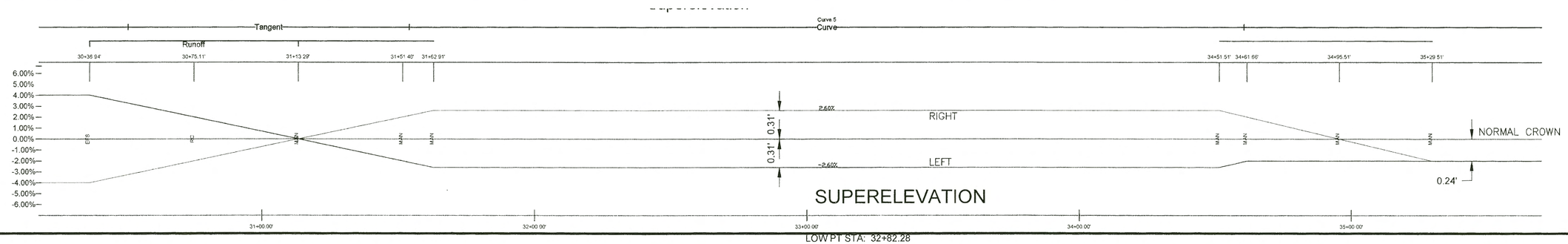

SUPERELEVATION

NOTE: DIMENSIONS LABELED ARE FROM CENTERLINE ELEVATION TO EDGE OF PAVEMENT.

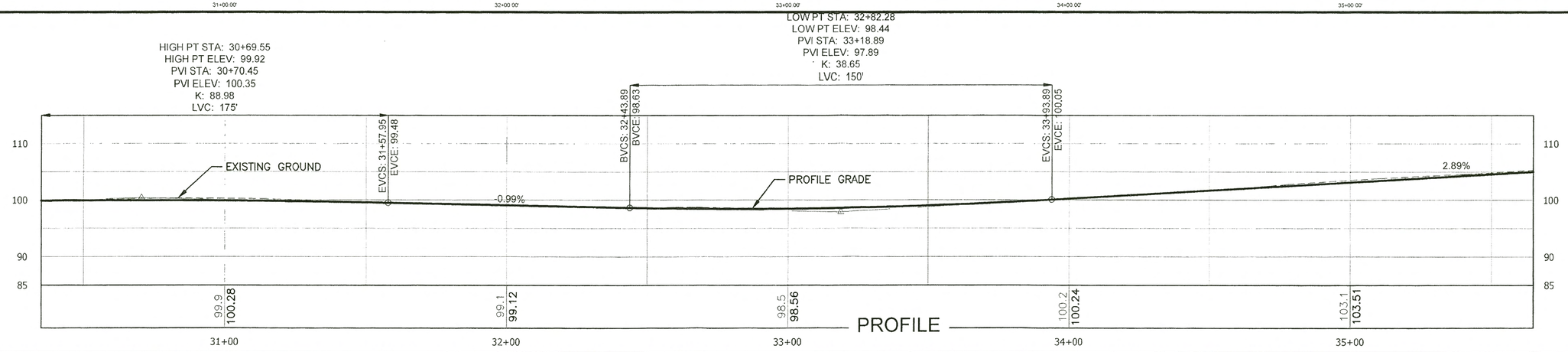

PROFILE

DATE 8/15/2016 11:02 | LAYOUT F5 | DESIGNED DD | CHECKED JB, LC | DRAFTED DD, JT

FILE O:\Ktn\68663\EN\Dwgs\Sheets\68663_F1-F15_PLAN & PROFILE.dwg

HMF 3/8/20

NO.	DATE	REVISION	STATE	PROJECT DESIGNATION	YEAR	SHEET NO.	TOTAL SHEETS
			ALASKA	Z686630000	2016	F6	55

Establish New Item 627(11) Water Line Repair C.O. #1

DESCRIPTION: This item is for all labor, materials, equipment and incidentals necessary to excavate a damaged water line at Station 37+06 LT on Franklin Road for emergency repairs, and to backfill and compact after repairs are completed. It converts Interim Work Authorization No. 4 from a Time and Materials basis to a lump sum item.

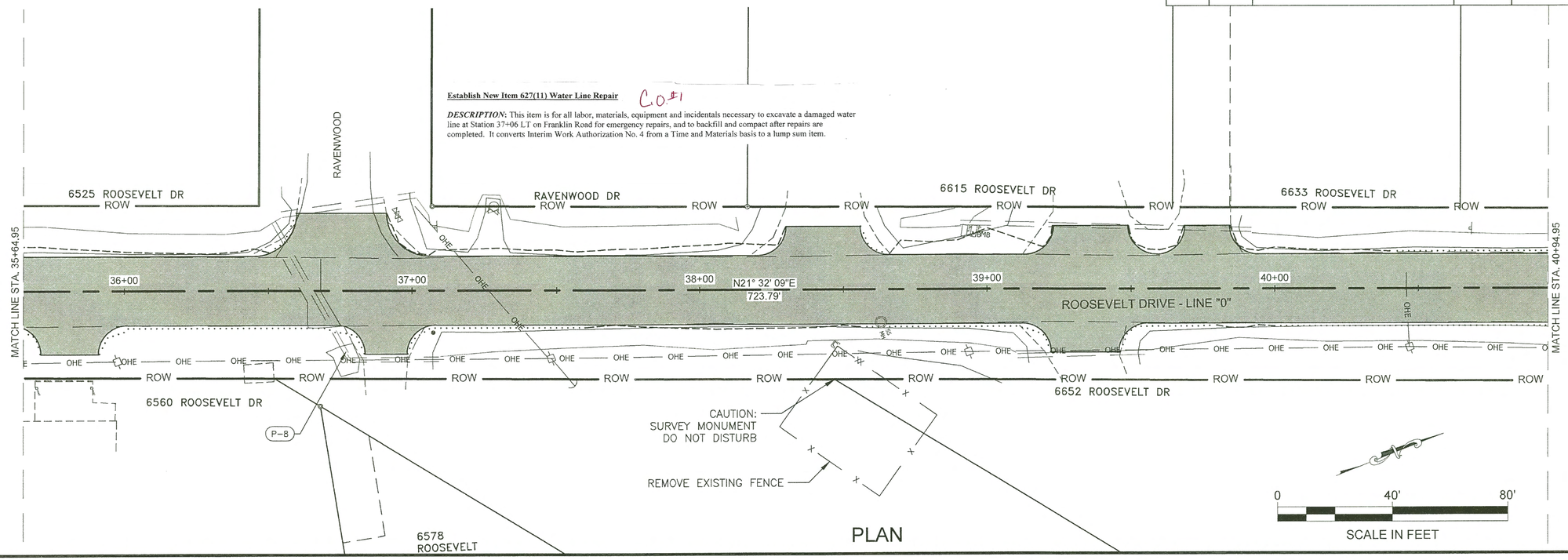

PLAN

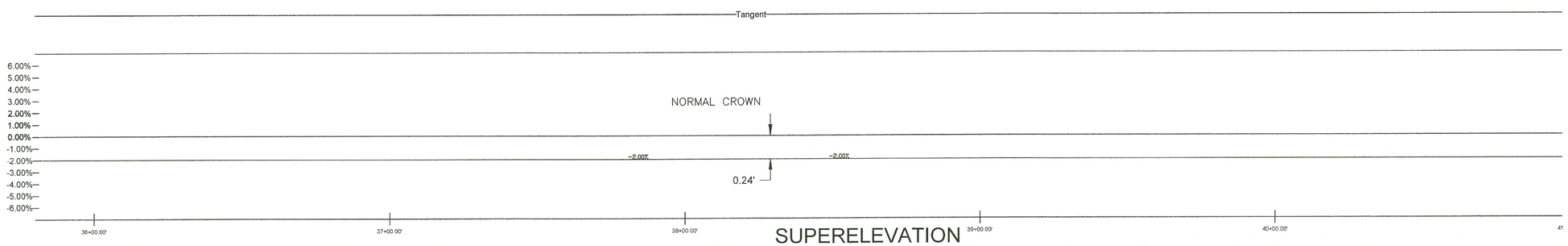

SUPERELEVATION

NOTE: DIMENSIONS LABELED ARE FROM CENTERLINE ELEVATION TO EDGE OF PAVEMENT.

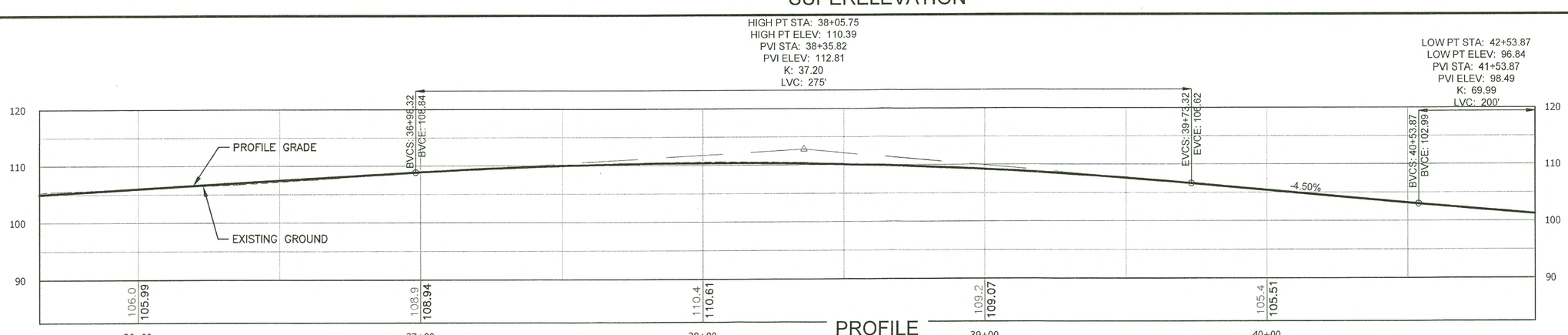

PROFILE

STATE OF ALASKA 49TH
James Brown
14083
REGISTERED PROFESSIONAL ENGINEER

DRAFTED DD, JT | CHECKED JB, LC | DESIGNED DD | LAYOUT F6 | DATE 8/15/2016 11:02 | FILE Q:\Ktn\68663\EN\Dwgs\Sheets\68663_F1-F15_PLAN & PROFILE.dwg

HMF 3.18.20

NO.	DATE	REVISION	STATE	PROJECT DESIGNATION	YEAR	SHEET NO.	TOTAL SHEETS
			ALASKA	Z686630000	2016	F7	55

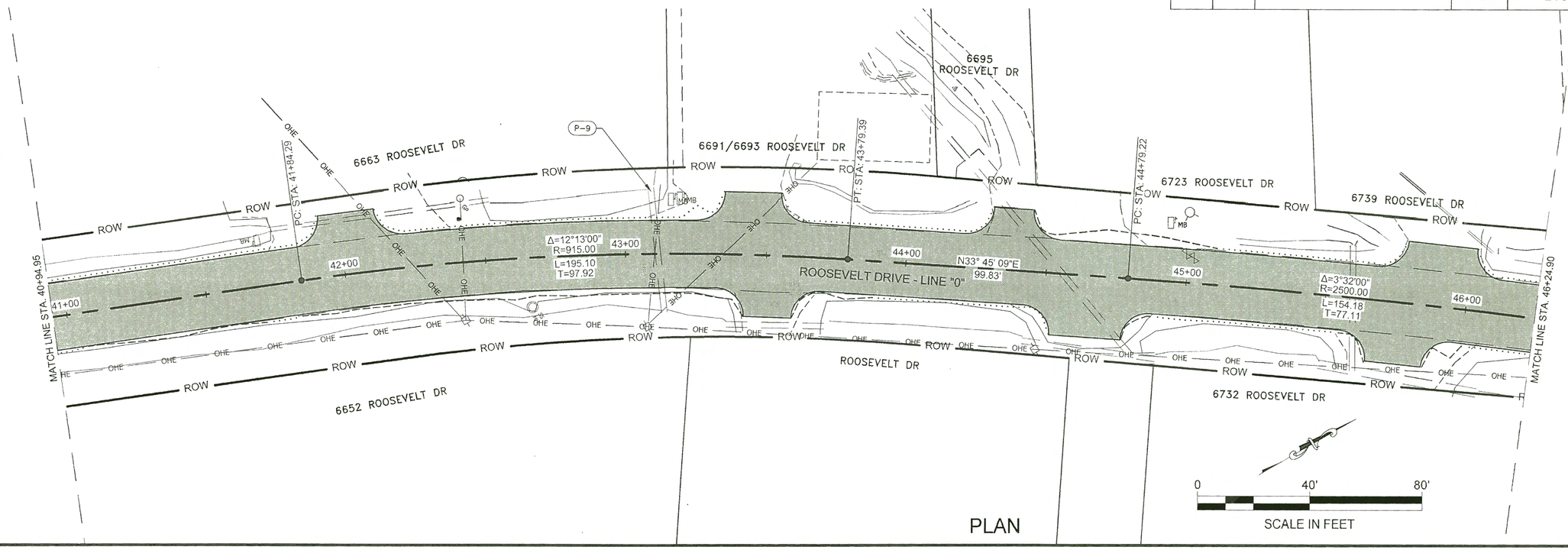

PLAN

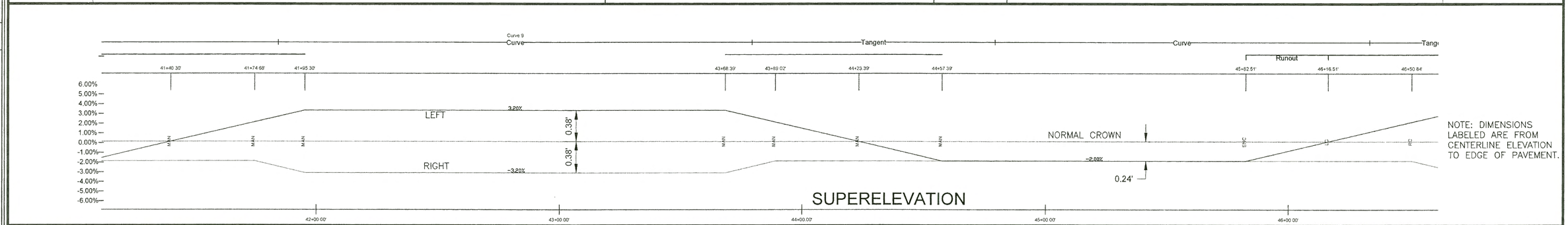

SUPERELEVATION

NOTE: DIMENSIONS LABELED ARE FROM CENTERLINE ELEVATION TO EDGE OF PAVEMENT.

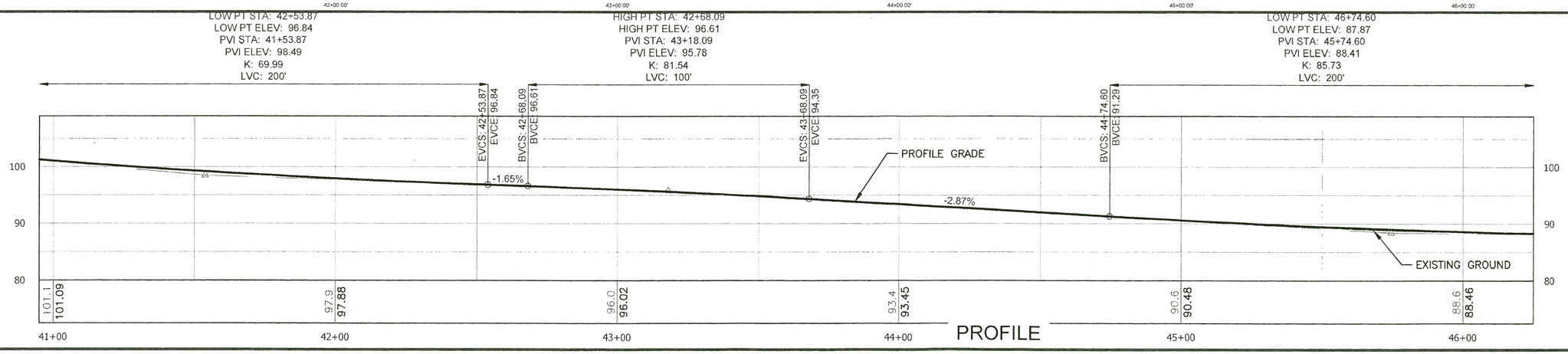

PROFILE

STATE OF ALASKA 49TH James Brown 14083 REGISTERED PROFESSIONAL ENGINEER

FILE	DATE	LAYOUT	DESIGNED	CHECKED	DRAFTED
Q:\Kin\68663\EN\Dwgs\Sheets\68663_F1-F15_PLAN & PROFILE.dwg	8/15/2016 11:02	F7	DD	JB, LC	DD, JT

HMF 3.18.20

NO.	DATE	REVISION	STATE	PROJECT DESIGNATION	YEAR	SHEET NO.	TOTAL SHEETS
			ALASKA	Z686630000	2016	F8	55

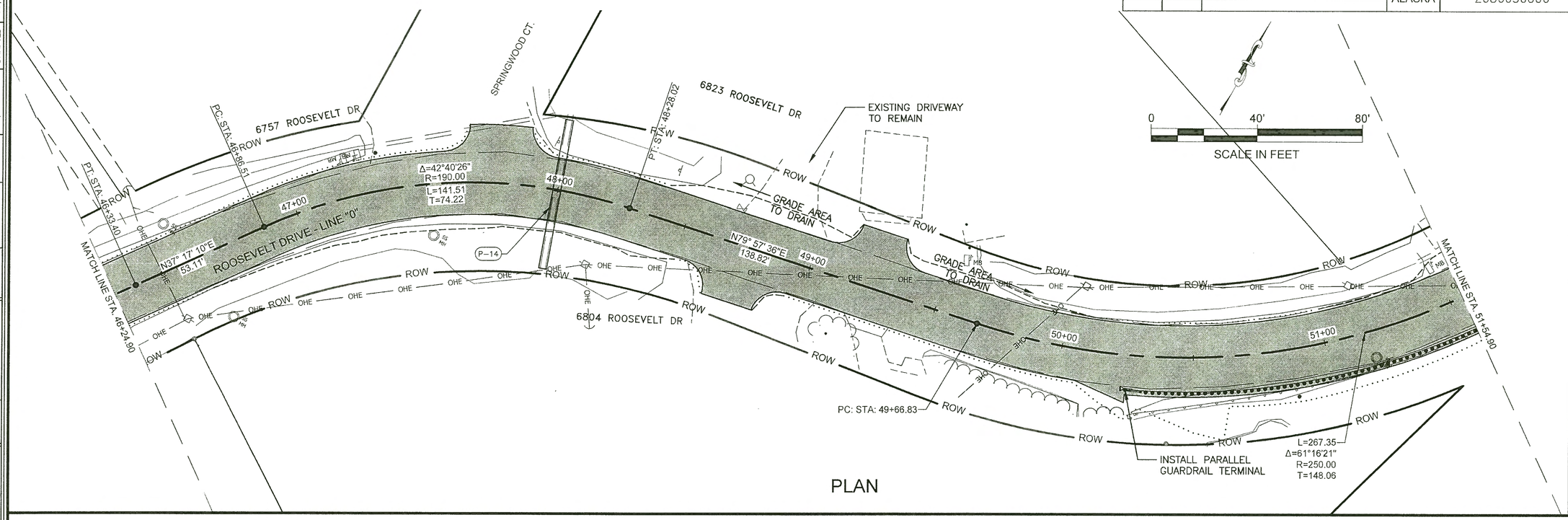

PLAN

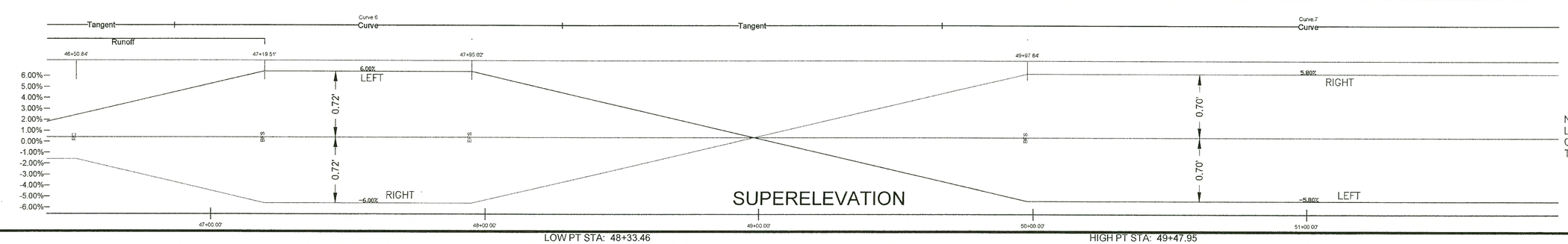

SUPERELEVATION

NOTE: DIMENSIONS LABELED ARE FROM CENTERLINE ELEVATION TO EDGE OF PAVEMENT.

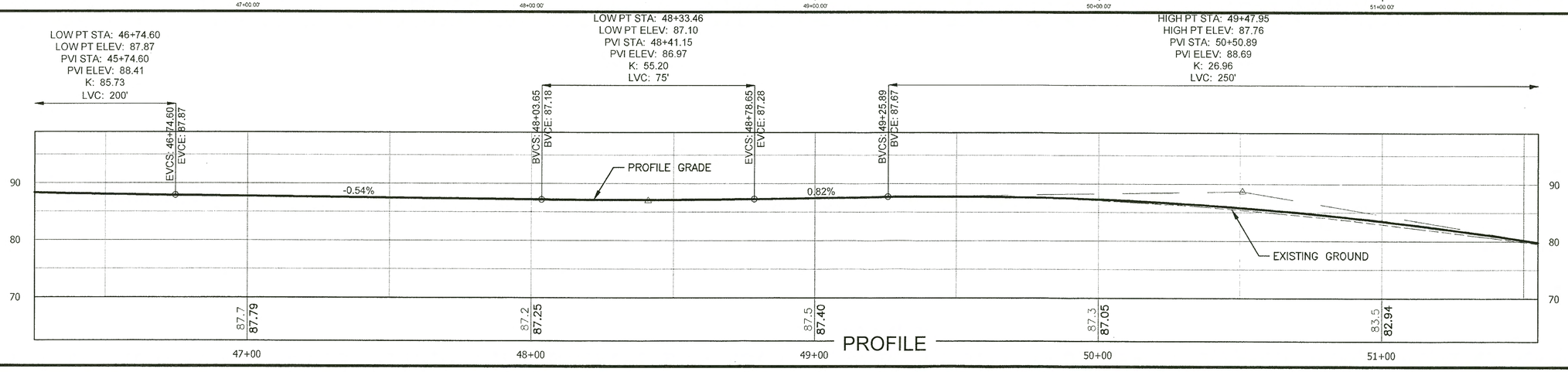

PROFILE

STATE OF ALASKA 49TH James Brown 14083 REGISTERED PROFESSIONAL ENGINEER

FILE Q:\Kin\68663\EN\Dwgs\Sheets\68663_F1-F15_PLAN & PROFILE.dwg | DATE 8/15/2016 11:02 | LAYOUT F8 | DESIGNED DD | CHECKED JB, LC | DRAFTED DD, JT

HMF 3/18/20

NO.	DATE	REVISION	STATE	PROJECT DESIGNATION	YEAR	SHEET NO.	TOTAL SHEETS
			ALASKA	Z686630000	2016	F9	55

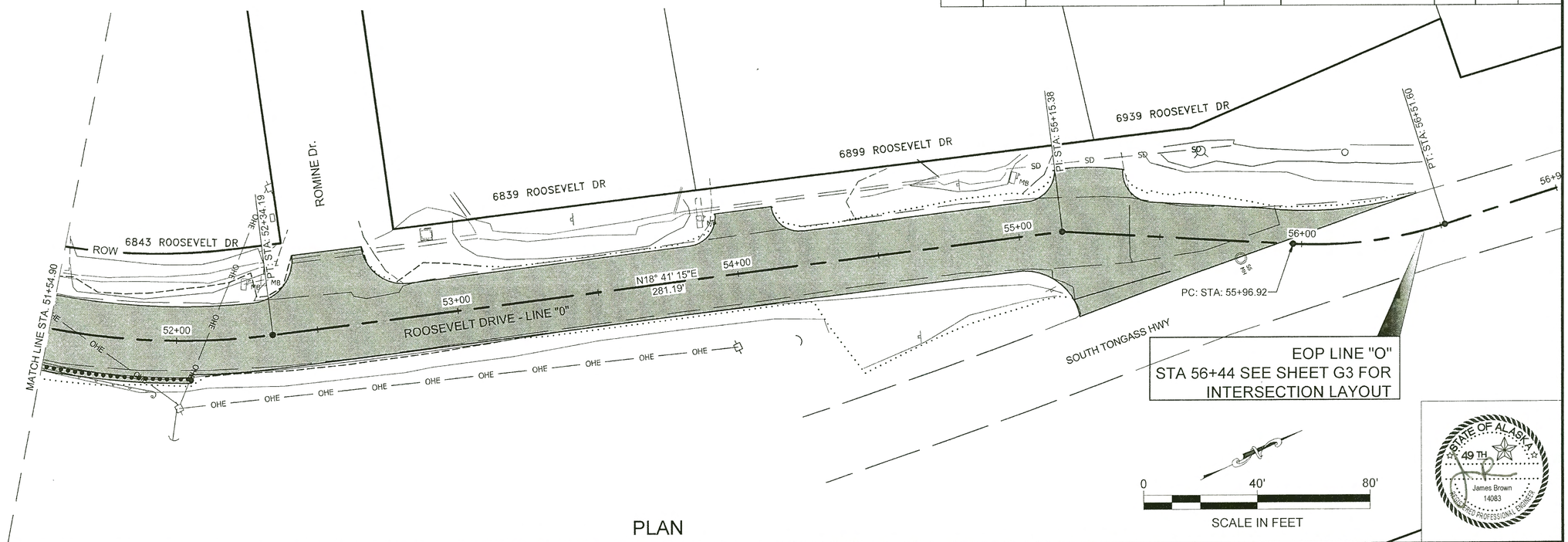

PLAN

STATE OF ALASKA 49TH James Brown 14083 REGISTERED PROFESSIONAL ENGINEER

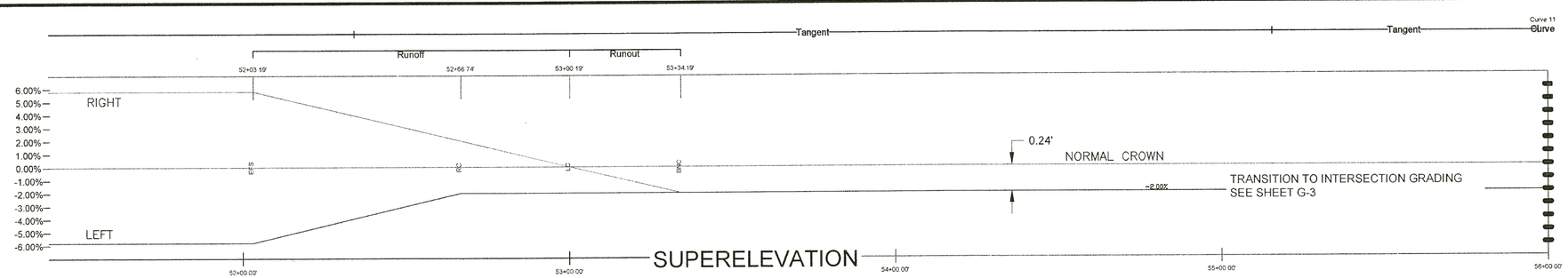

SUPERELEVATION

NOTE: DIMENSIONS LABELED ARE FROM CENTERLINE ELEVATION TO EDGE OF PAVEMENT.

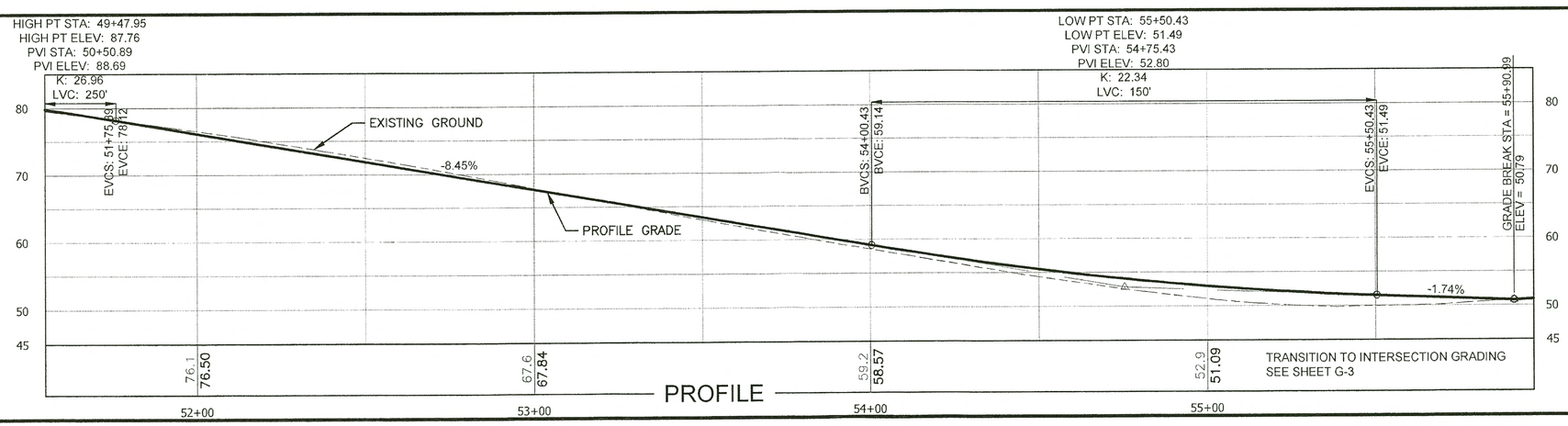

PROFILE

FILE Q:\Kfn\66663\EN\Dwgs\Sheets\66663_F1-F15_PLAN & PROFILE.dwg | DATE 8/15/2016 11:02 | LAYOUT F9 | DESIGNED DD | CHECKED JB, LC | DRAFTED DD, JT

HMF 318.20

NO.	DATE	REVISION	STATE	PROJECT DESIGNATION	YEAR	SHEET NO.	TOTAL SHEETS
			ALASKA	Z686630000	2016	F10	55

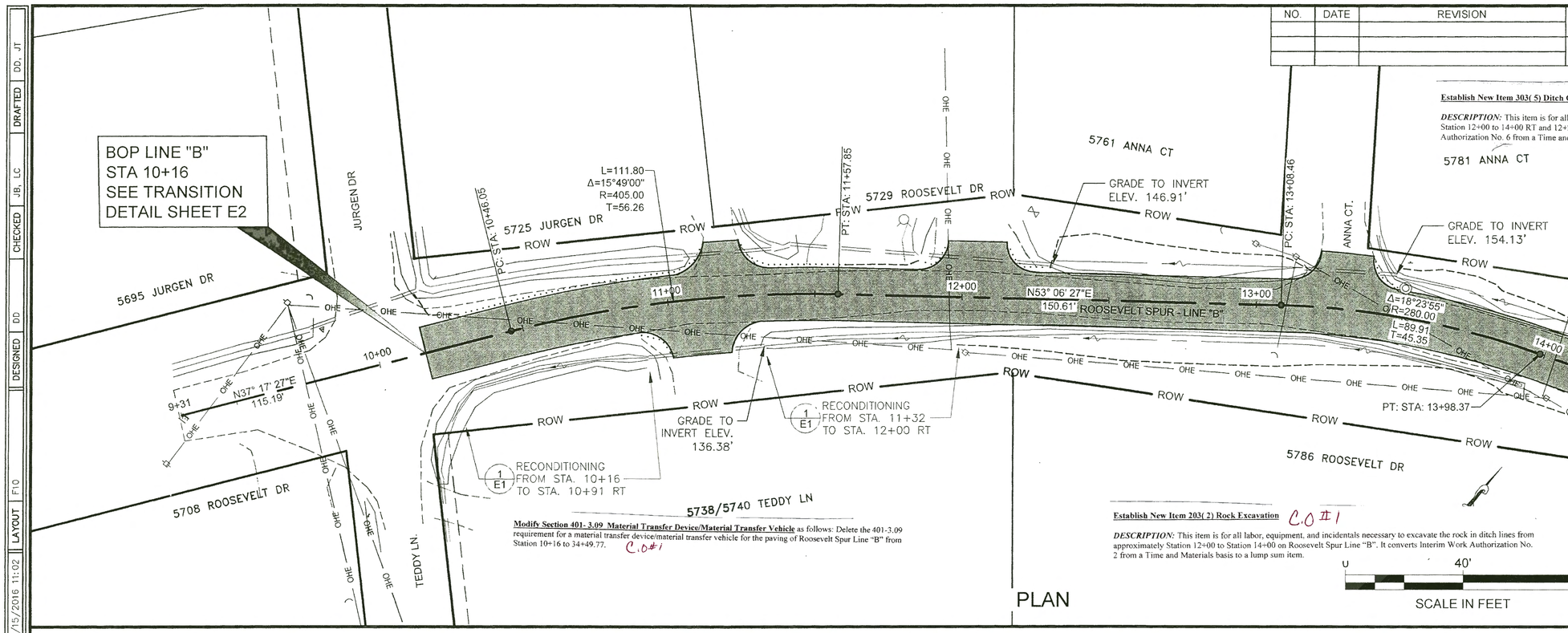

Establish New Item 303(5) Ditch Construction C.O #1

DESCRIPTION: This item is for all labor, equipment, and incidentals necessary to construct ditch from approximately Station 12+00 to 14+00 RT and 12+25 to 14+50 LT on Roosevelt Spur Line "B". It converts Interim Work Authorization No. 6 from a Time and Materials basis to a lump sum item.

Modify Section 401- 3.09 Material Transfer Device/Material Transfer Vehicle as follows: Delete the 401-3.09 requirement for a material transfer device/material transfer vehicle for the paving of Roosevelt Spur Line "B" from Station 10+16 to 34+49.77. C.O #1

Establish New Item 203(2) Rock Excavation C.O #1

DESCRIPTION: This item is for all labor, equipment, and incidentals necessary to excavate the rock in ditch lines from approximately Station 12+00 to Station 14+00 on Roosevelt Spur Line "B". It converts Interim Work Authorization No. 2 from a Time and Materials basis to a lump sum item.

PLAN

STATE OF ALASKA 49TH James Brown 14083 REGISTERED PROFESSIONAL ENGINEER

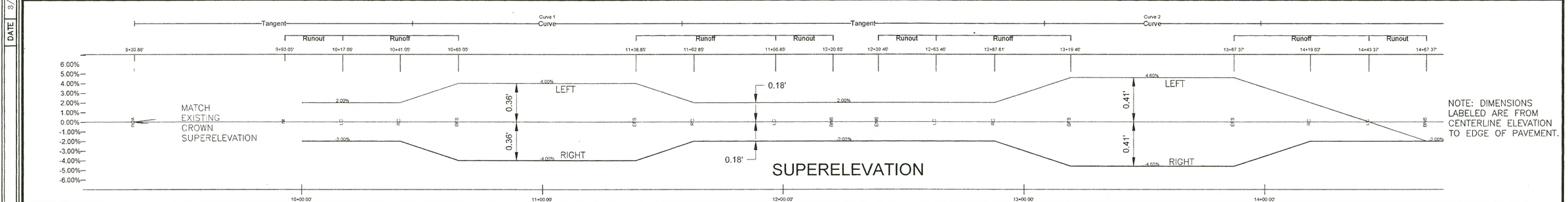

NOTE: DIMENSIONS LABELED ARE FROM CENTERLINE ELEVATION TO EDGE OF PAVEMENT.

SUPERELEVATION

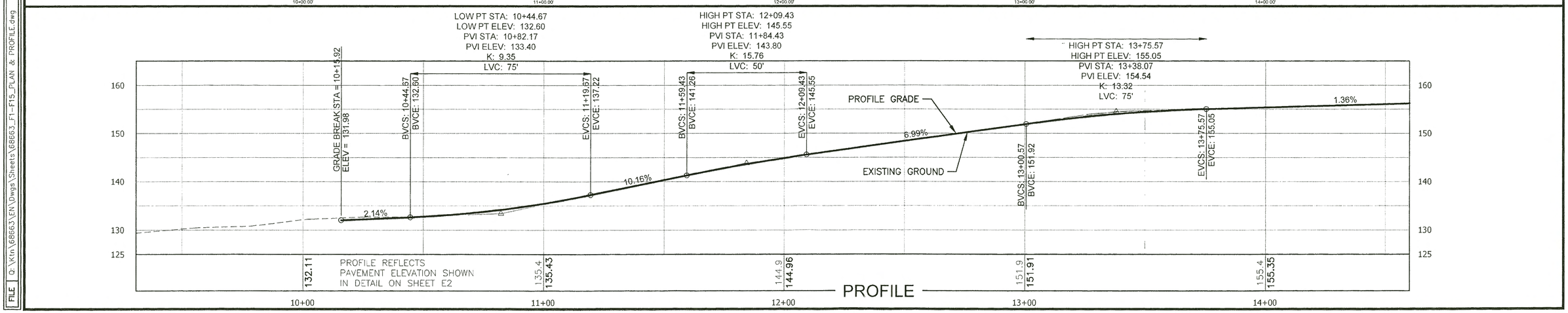

PROFILE

FILE Q:\Kin\68663\EN\Dwgs\Sheets\68663_F1-F15_PLAN & PROFILE.dwg | DATE 8/15/2016 11:02 | LAYOUT F10 | DESIGNED DD | CHECKED JB, LC | DRAFTED DD, JT

HMF 3.18.20

NO.	DATE	REVISION	STATE	PROJECT DESIGNATION	YEAR	SHEET NO.	TOTAL SHEETS
			ALASKA	Z686630000	2016	F11	55

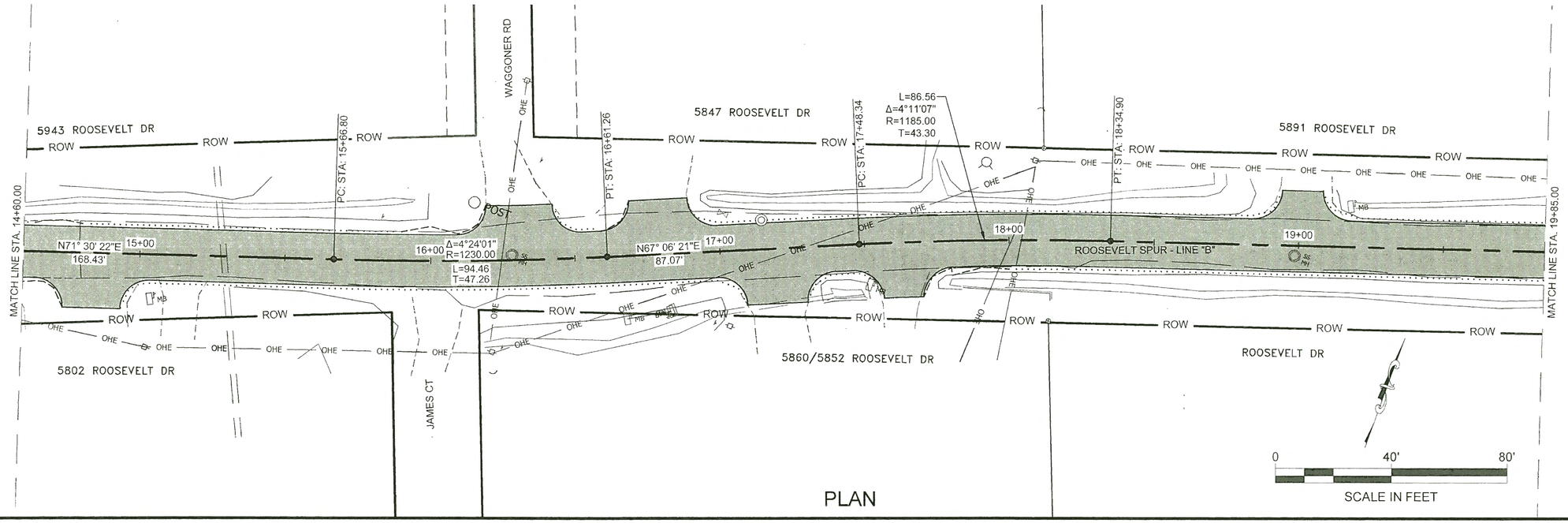

PLAN

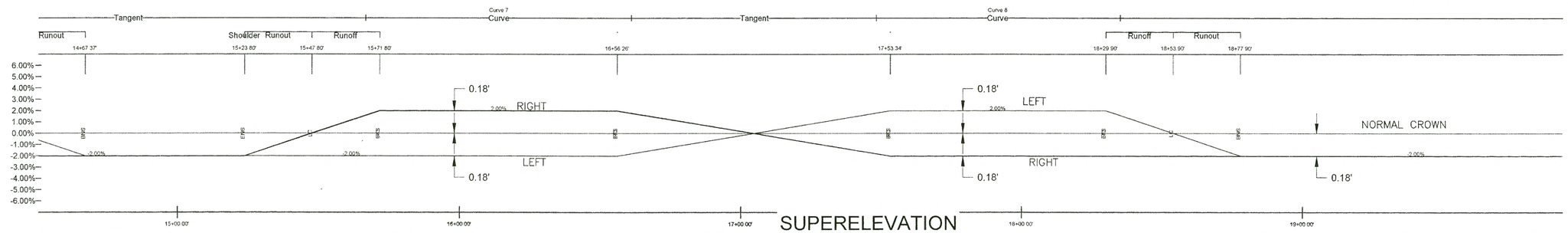

SUPERELEVATION

NOTE: DIMENSIONS LABELED ARE FROM CENTERLINE ELEVATION TO EDGE OF PAVEMENT.

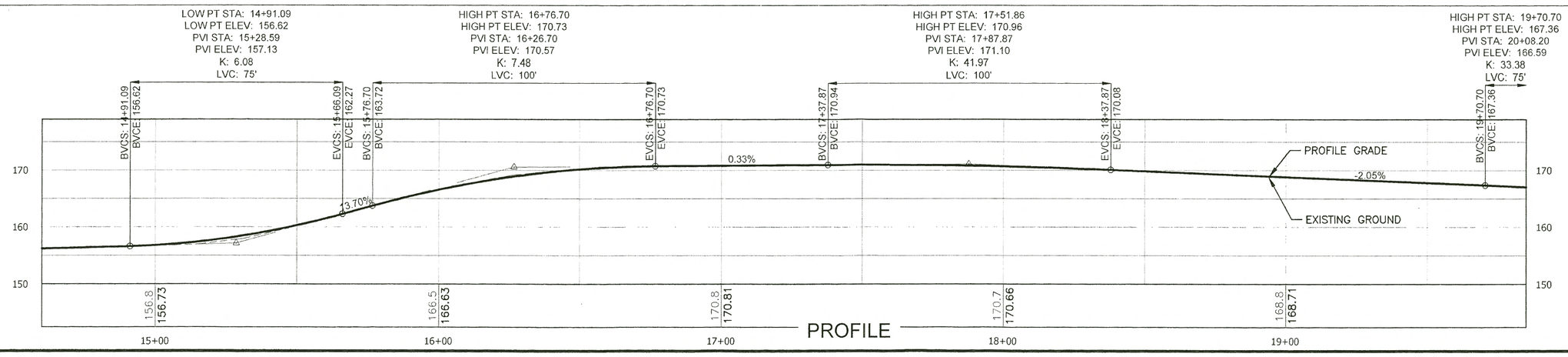

PROFILE

STATE OF ALASKA 49TH James Brown 14083 REGISTERED PROFESSIONAL ENGINEER

FILE Q:\Ktn\68663\EN\Dwgs\Sheets\68663_F1-F15_PLAN & PROFILE.dwg | DATE 8/15/2016 11:02 | LAYOUT F11 | DESIGNED DD | CHECKED JB, LC | DRAFTED DD, JT

HMF 3.18.20

NO.	DATE	REVISION	STATE	PROJECT DESIGNATION	YEAR	SHEET NO.	TOTAL SHEETS
			ALASKA	Z686630000	2016	F12	55

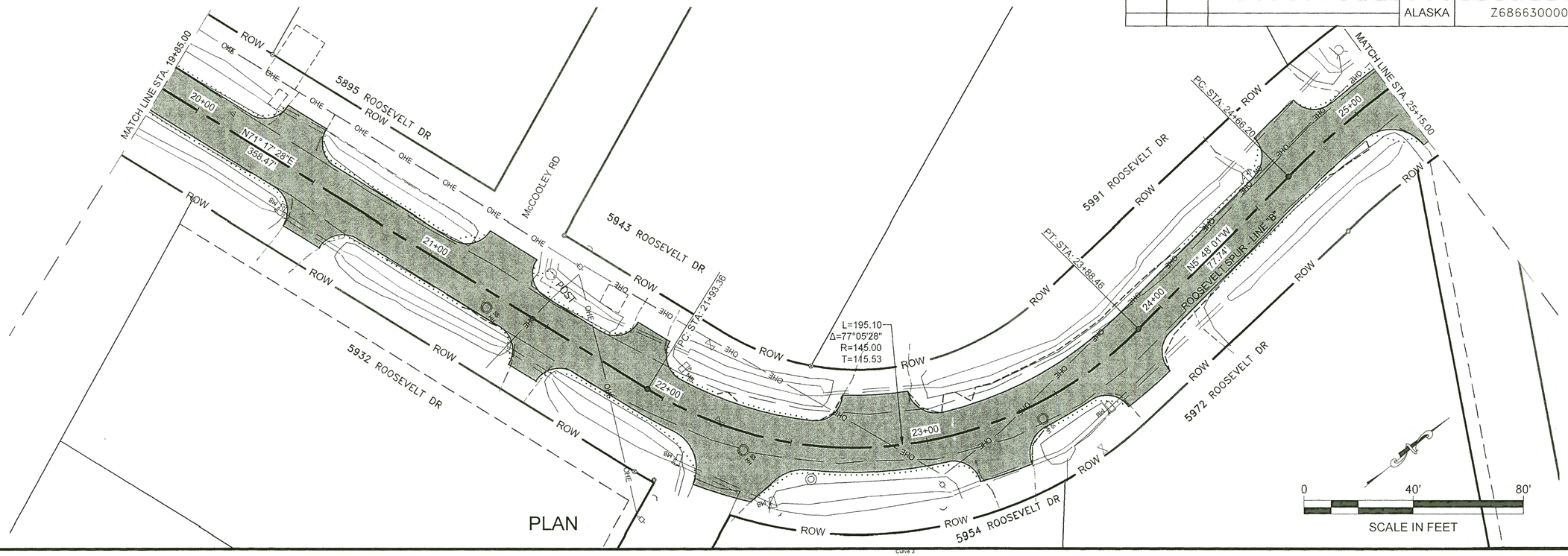

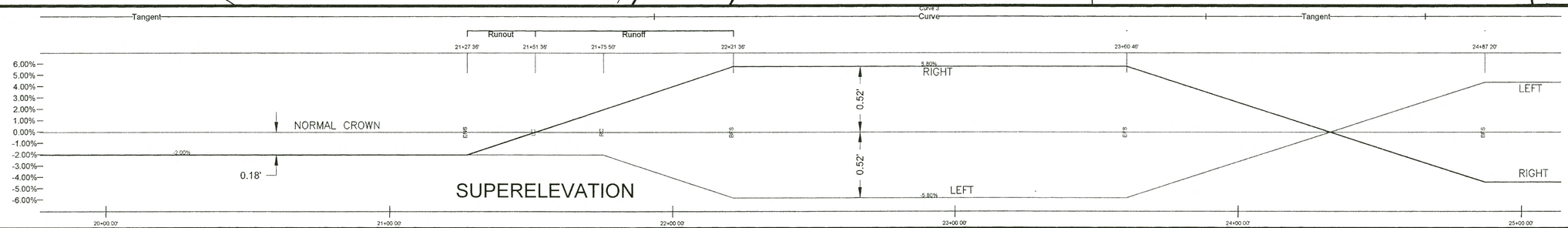

NOTE: DIMENSIONS LABELED ARE FROM CENTERLINE ELEVATION TO EDGE OF PAVEMENT.

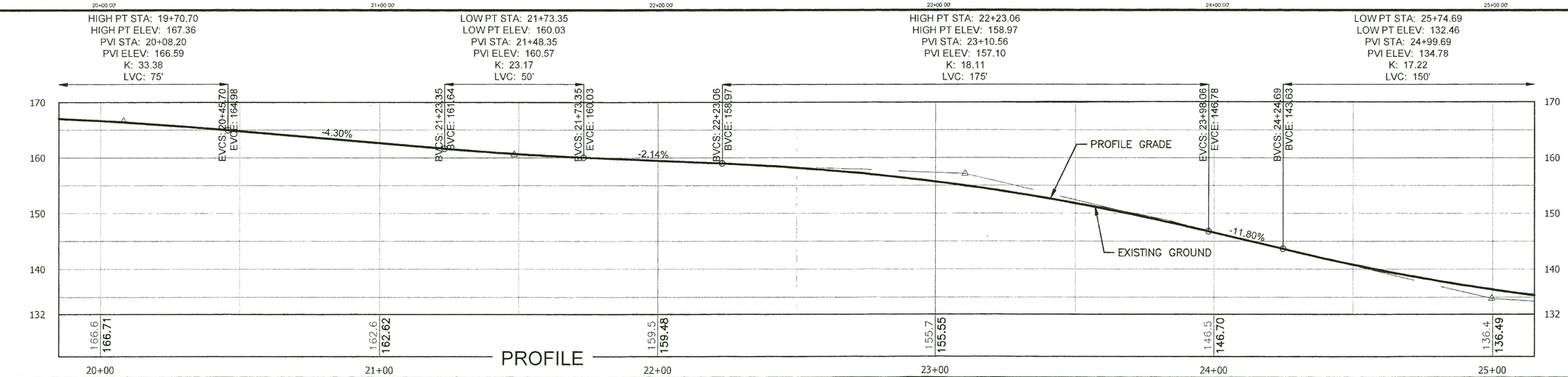

STATE OF ALASKA
49TH
James Brown
14083
REGISTERED PROFESSIONAL ENGINEER

FILE	Q:\Kin\68663\EN\Dwgs\Sheets\68663_F1-F15_PLAN & PROFILE.dwg	DATE	8/15/2016 11:02	LAYOUT	F12	DESIGNED	DD	CHECKED	JB, LC	DRAFTED	DD, JT

HMF 3.18.20

NO.	DATE	REVISION	STATE	PROJECT DESIGNATION	YEAR	SHEET NO.	TOTAL SHEETS
			ALASKA	Z686630000	2016	F13	55

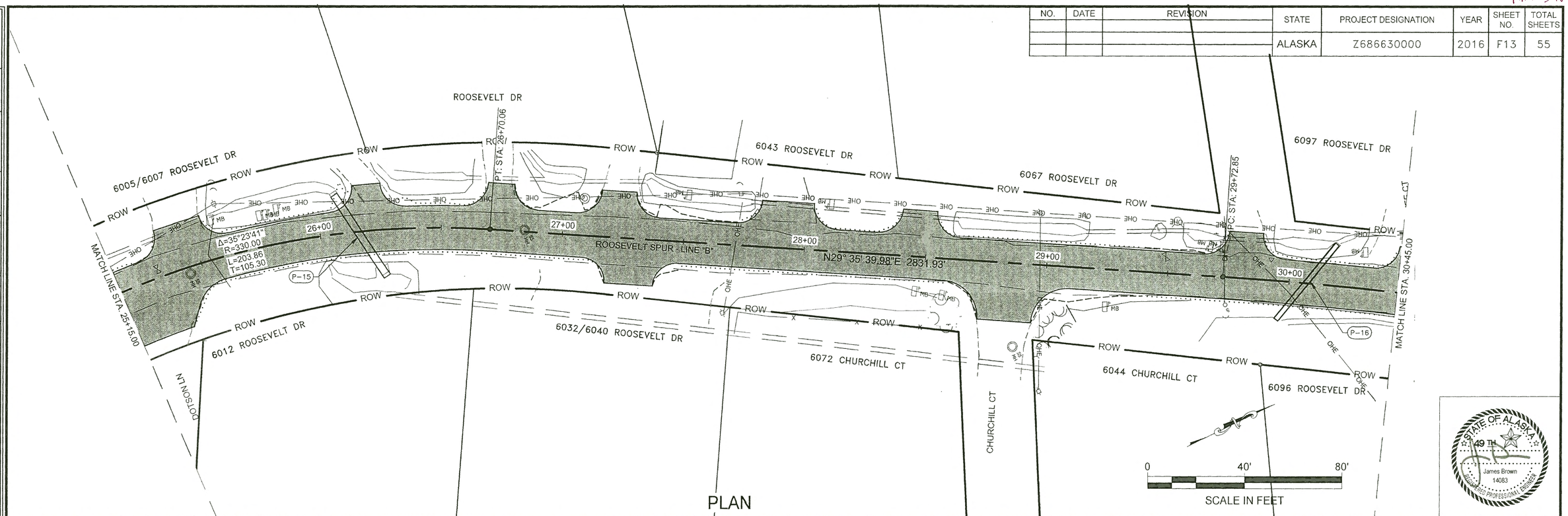

PLAN

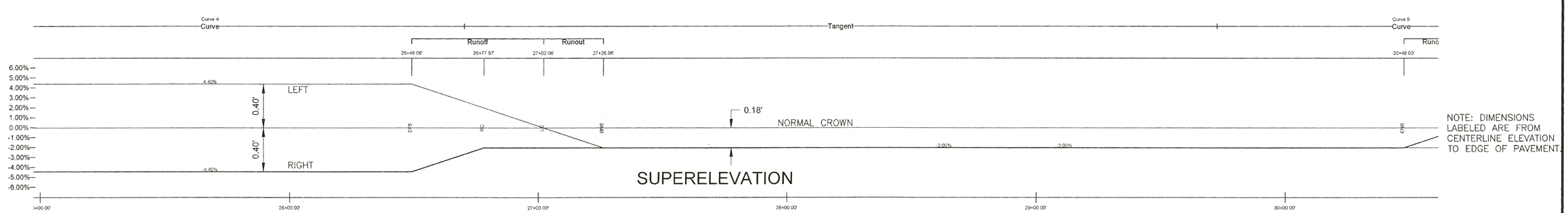

SUPERELEVATION

NOTE: DIMENSIONS LABELED ARE FROM CENTERLINE ELEVATION TO EDGE OF PAVEMENT.

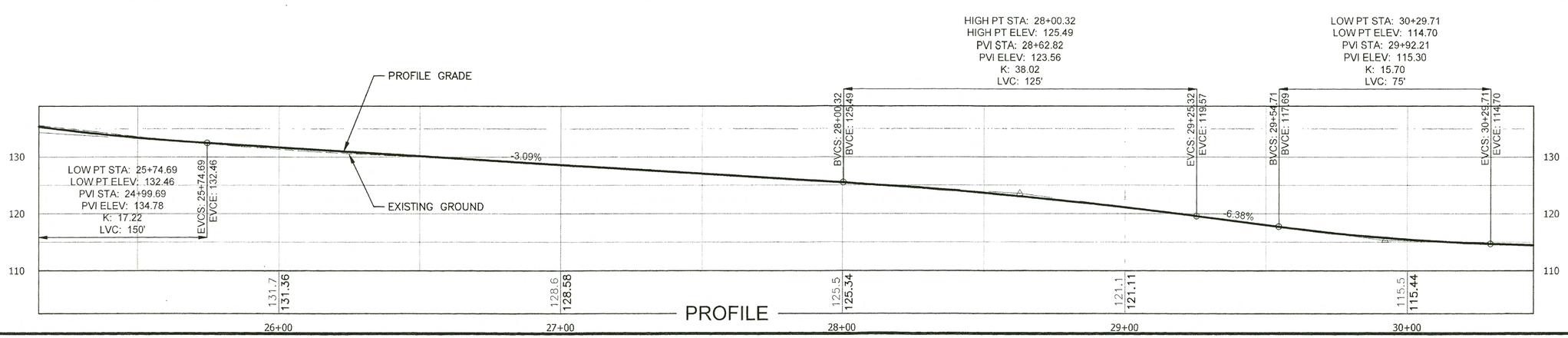

PROFILE

DATE 8/15/2016 11:02 | LAYOUT F13 | DESIGNED DD | CHECKED JB, LC | DRAFTED DD, JT

FILE Q:\Ktn\68663\EN\Dwgs\Sheets\68663_F1-F15_PLAN & PROFILE.dwg

HMF 3/8/20

NO.	DATE	REVISION	STATE	PROJECT DESIGNATION	YEAR	SHEET NO.	TOTAL SHEETS
			ALASKA	Z686630000	2016	F14	55

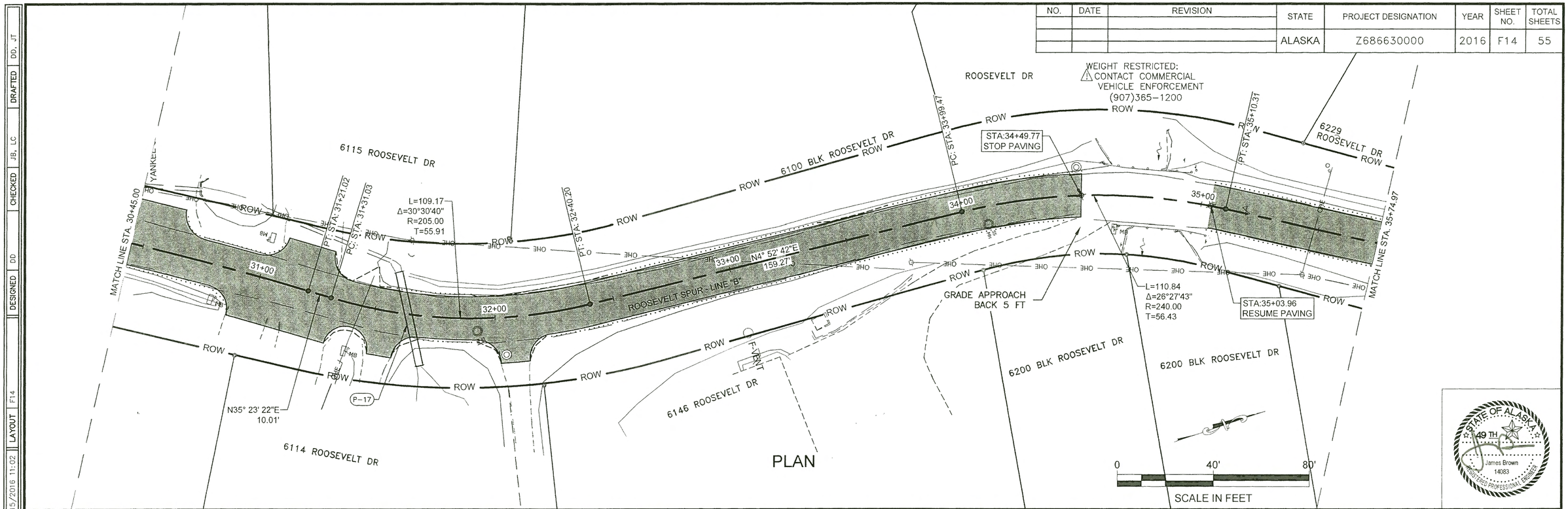

PLAN

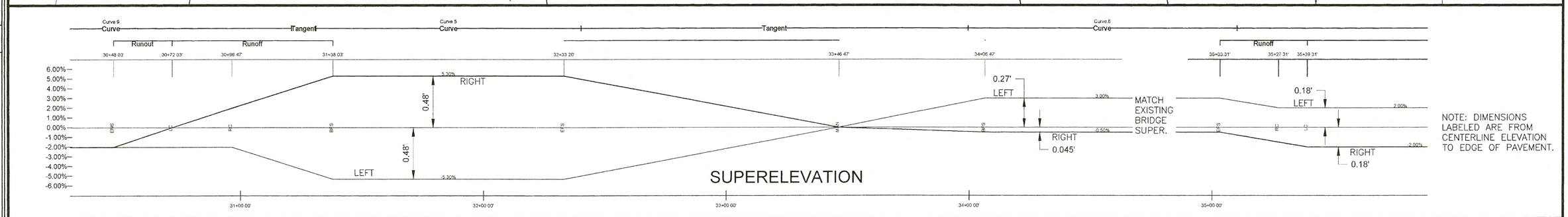

SUPERELEVATION

NOTE: DIMENSIONS LABELED ARE FROM CENTERLINE ELEVATION TO EDGE OF PAVEMENT.

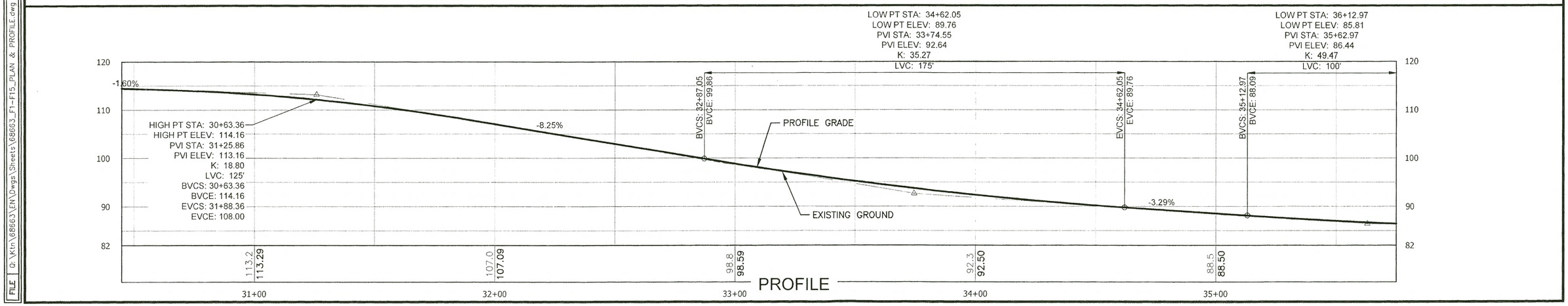

PROFILE

DATE 8/15/2016 11:02 | LAYOUT F14 | DESIGNED DD | CHECKED JB, LC | DRAFTED DD, JT

FILE Q:\Kitn\68663\EN\Dwgs\Sheets\68663_F1-F15_PLAN & PROFILE.dwg

HMF 3.18.20

NO.	DATE	REVISION	STATE	PROJECT DESIGNATION	YEAR	SHEET NO.	TOTAL SHEETS
			ALASKA	Z686630000	2016	F15	55

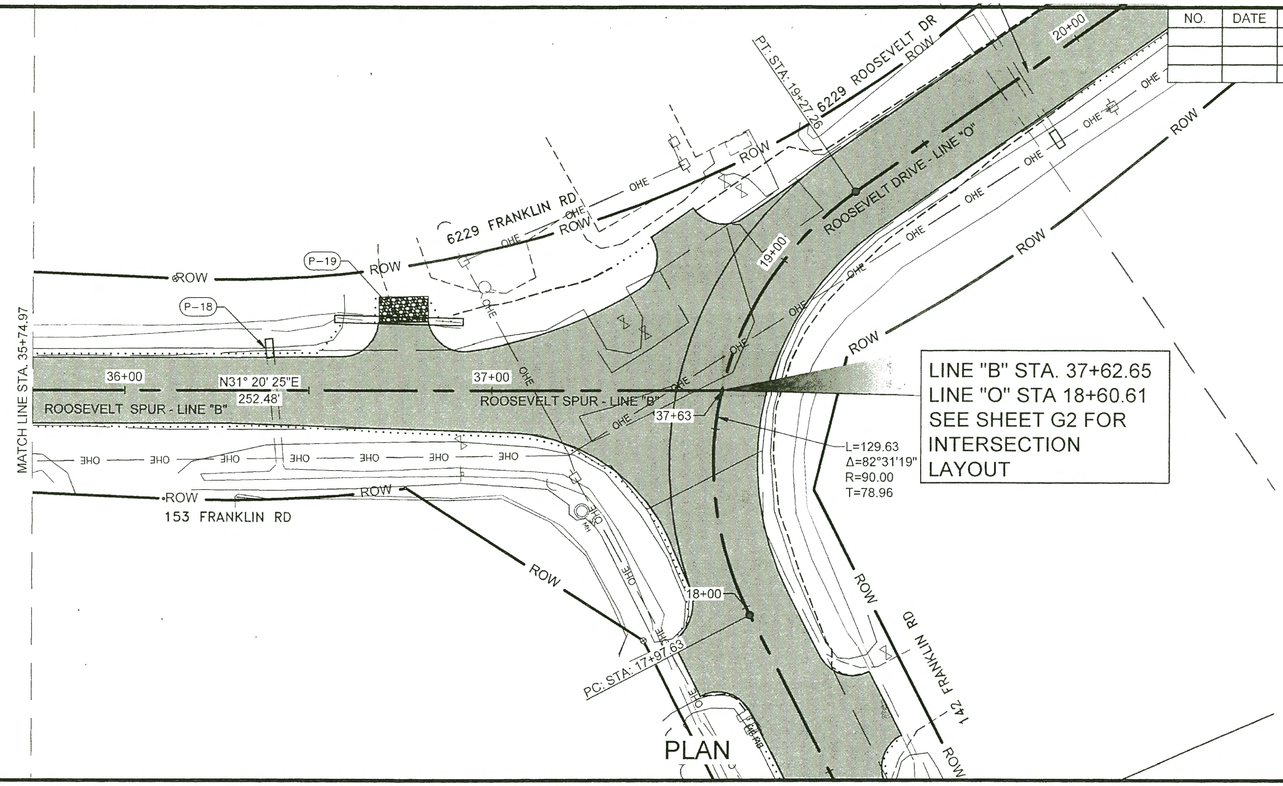

PLAN

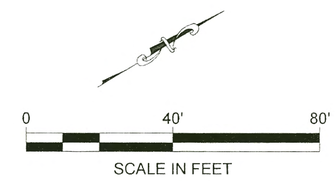

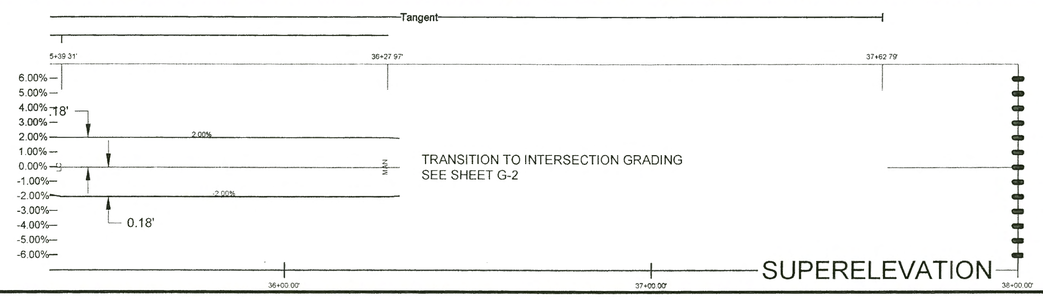

TRANSITION TO INTERSECTION GRADING
SEE SHEET G-2

SUPERELEVATION

NOTE: DIMENSIONS
LABELED ARE FROM
CENTERLINE ELEVATION
TO EDGE OF PAVEMENT.

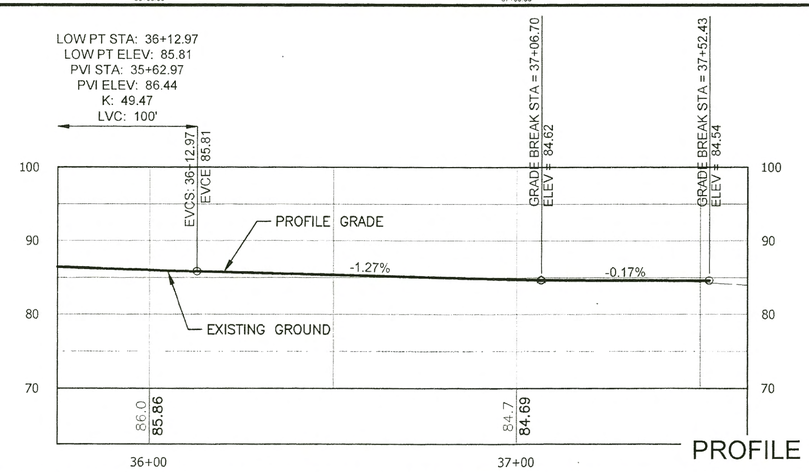

PROFILE

DESIGNED	DD	CHECKED	JB, LC	DRAFTED	DD, JT
LAYOUT	F15	DATE	8/15/2016 11:02		

FILE Q:\Kin\68663\EN\Dwgs\Sheets\68663_F1-F15_PLAN & PROFILE.dwg

HMF 3/8/20

NO.	DATE	REVISION	STATE	PROJECT DESIGNATION	YEAR	SHEET NO.	TOTAL SHEETS
			ALASKA	Z686630000	2016	G1	55

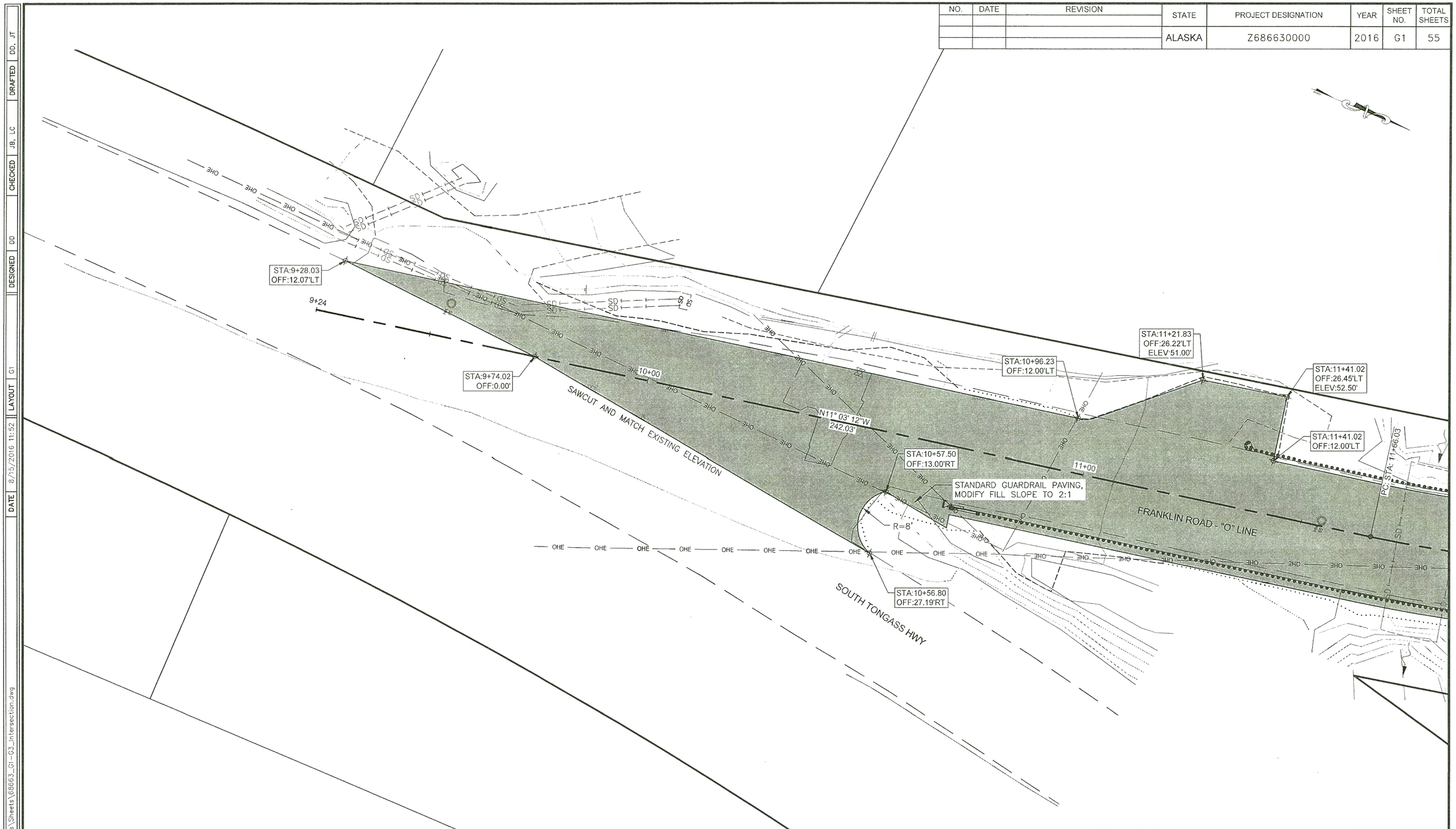

0 20' 40'

SCALE IN FEET

STATE OF ALASKA 49TH
James Brown
14083
REGISTERED PROFESSIONAL ENGINEER

STATE OF ALASKA DEPARTMENT OF TRANSPORTATION
AND PUBLIC FACILITIES
6860 GLACIER HIGHWAY, JUNEAU, AK 99811
(907)465-1763

KTN ROOSEVELT DRIVE &
FRANKLIN ROAD
PAVEMENT REHABILITATION

INTERSECTION LAYOUT PLAN

FILE Q:\Ktn\68663\EN\Dwgs\Sheets\68663_G1-G3_Intersection.dwg | DATE 8/15/2016 11:52 | LAYOUT G1 | DESIGNED DD | CHECKED JB, LC | DRAFTED DD, JT

HMF 3.18.20

NO.	DATE	REVISION	STATE	PROJECT DESIGNATION	YEAR	SHEET NO.	TOTAL SHEETS
			ALASKA	Z686630000	2016	G2	55

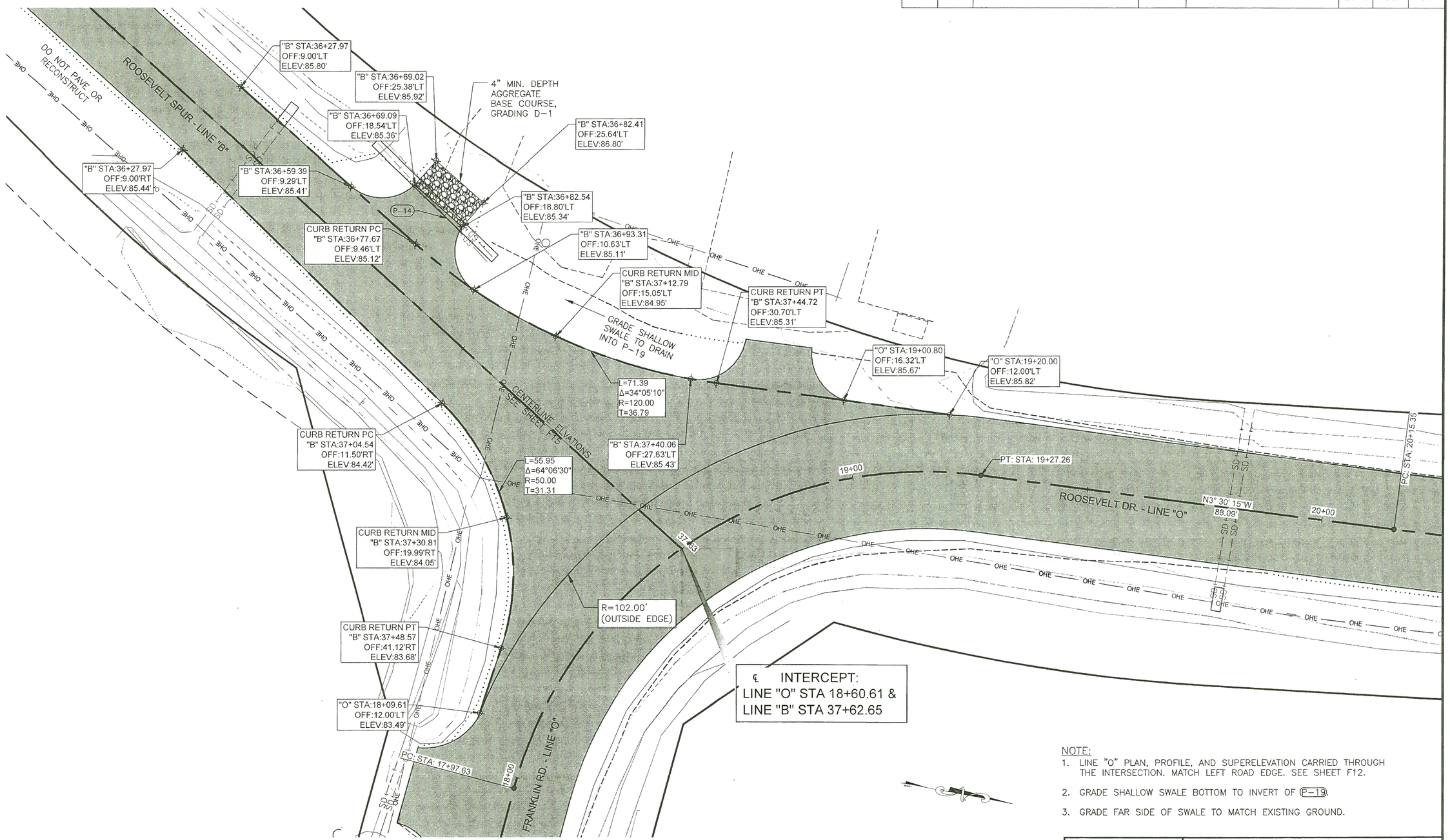

NOTE:

1. LINE "O" PLAN, PROFILE, AND SUPERELEVATION CARRIED THROUGH THE INTERSECTION. MATCH LEFT ROAD EDGE. SEE SHEET F12.
2. GRADE SHALLOW SWALE BOTTOM TO INVERT OF (P-19).
3. GRADE FAR SIDE OF SWALE TO MATCH EXISTING GROUND.

0 20' 40'

SCALE IN FEET

STATE OF ALASKA 49TH
James Brown
14083
LICENSED PROFESSIONAL ENGINEER

STATE OF ALASKA DEPARTMENT OF TRANSPORTATION AND PUBLIC FACILITIES
6860 GLACIER HIGHWAY, JUNEAU, AK 99811
(907)465-1763

KTN ROOSEVELT DRIVE & FRANKLIN ROAD PAVEMENT REHABILITATION

INTERSECTION LAYOUT PLAN

FILE	Q:\Ktn\68663\EN\Dwgs\Sheets\68663_G1-G3_Intersection.dwg	DATE	8/15/2016 11:52	LAYOUT	G2	DESIGNED	DD	CHECKED	JB, LC	DRAFTED	DD, JT

HMF. 3.18.20

NO.	DATE	REVISION	STATE	PROJECT DESIGNATION	YEAR	SHEET NO.	TOTAL SHEETS
			ALASKA	Z686630000	2016	G3	55

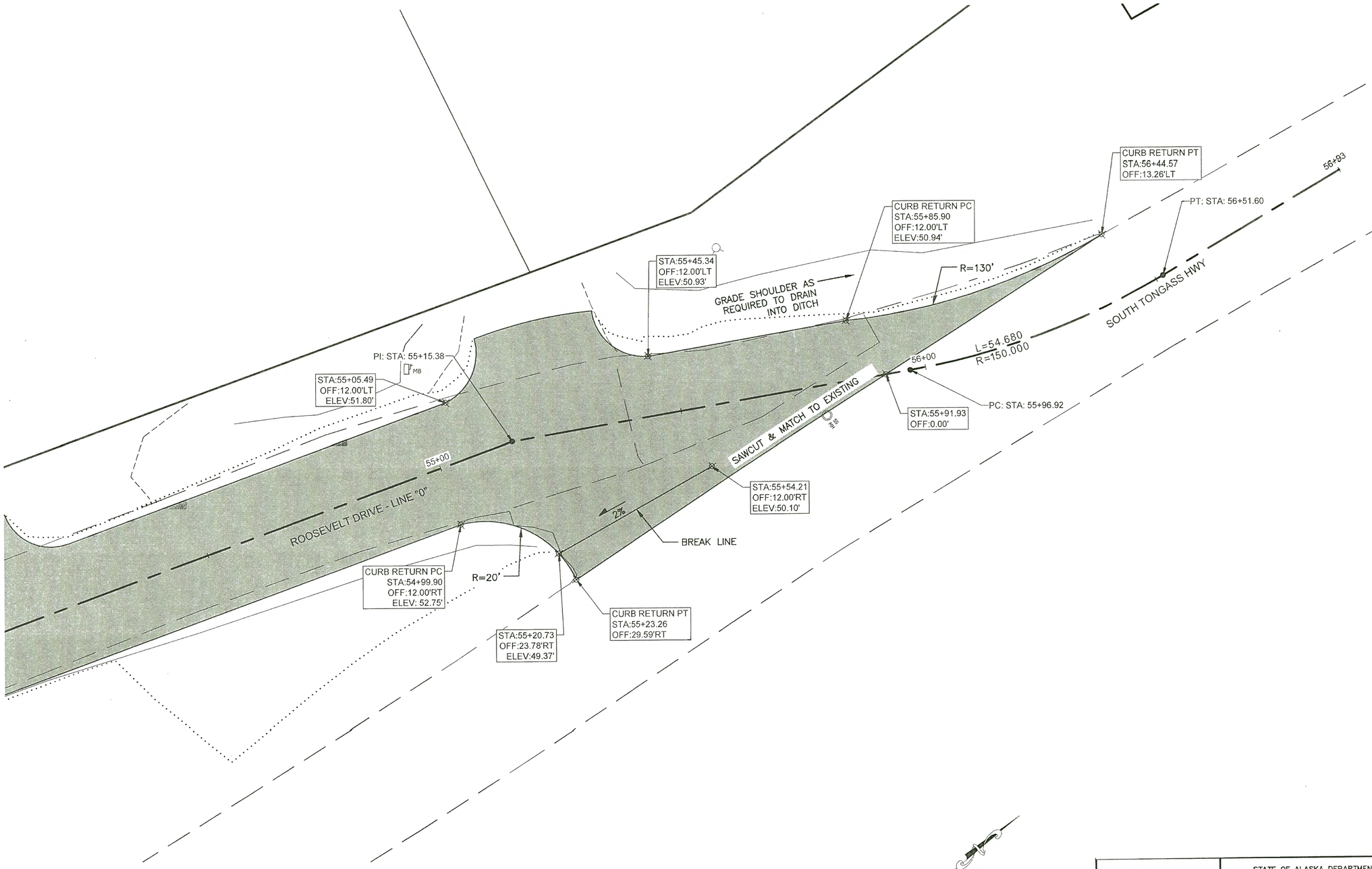

STATE OF ALASKA DEPARTMENT OF TRANSPORTATION AND PUBLIC FACILITIES
6860 GLACIER HIGHWAY, JUNEAU, AK 99811
(907)465-1763

STATE OF ALASKA 49TH
James Brown
14083
REGISTERED PROFESSIONAL ENGINEER

KTN ROOSEVELT DRIVE & FRANKLIN ROAD PAVEMENT REHABILITATION

INTERSECTION LAYOUT PLAN

FILE Q:\Ktn\68663\EN\Dwgs\Sheets\68663_G1-G3_Intersection.dwg | DATE 8/15/2016 11:52 | LAYOUT G3 | DESIGNED DD | CHECKED JB, LC | DRAFTED DD, JT

HMF 3.18.20

NO.	DATE	REVISION	STATE	PROJECT DESIGNATION	YEAR	SHEET NO.	TOTAL SHEETS
			ALASKA	Z686630000	2016	H1	55

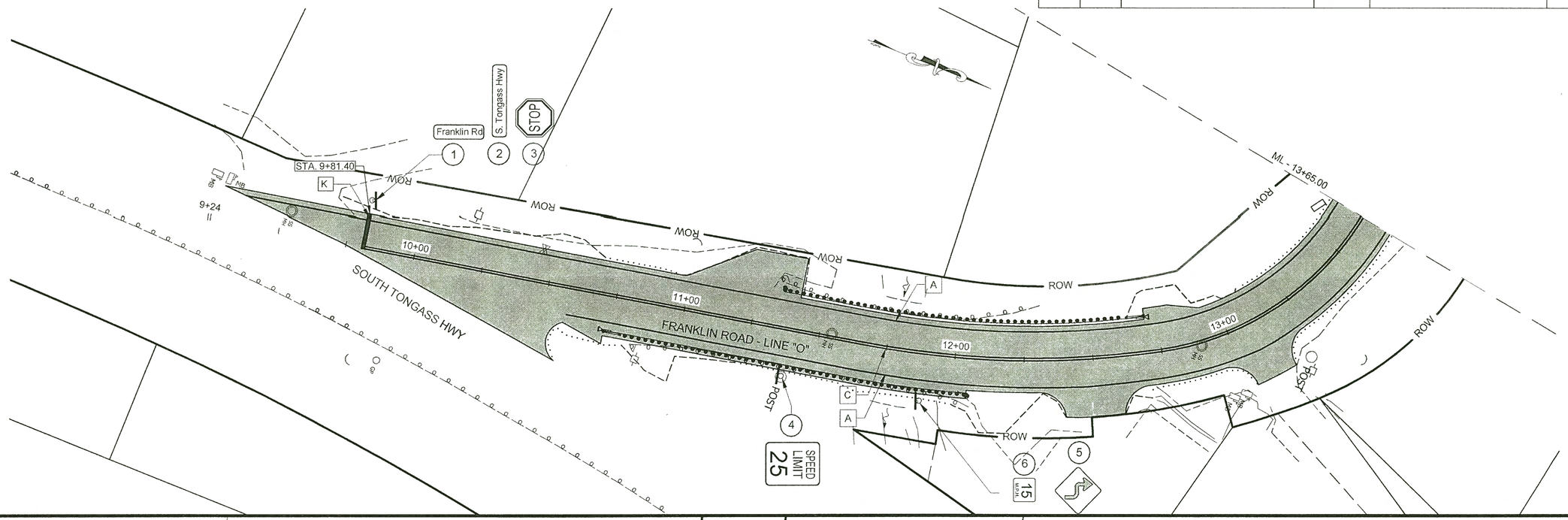

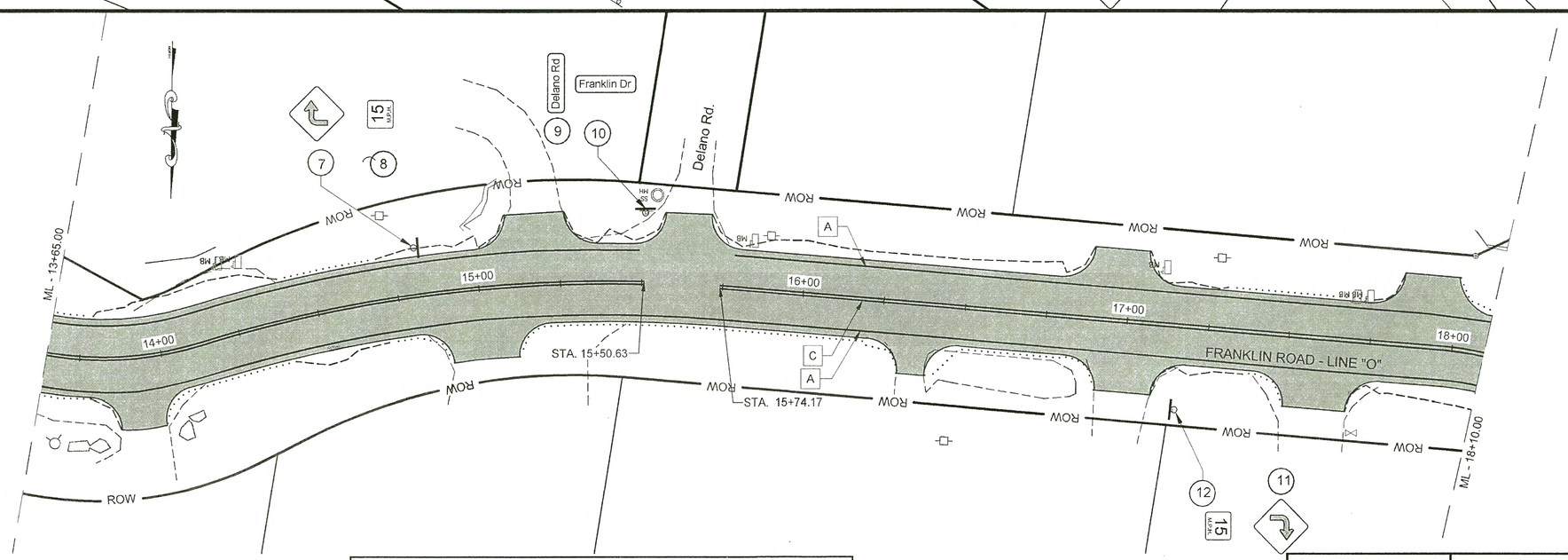

STRIPING LEGEND

SYMBOL	DESCRIPTION	PATTERN	L.F.
A	SOLID, WHITE 4"		8730
B	BROKEN, YELLOW 4"	2' 6' 2'	75
C	SOLID DOUBLE, YELLOW 4"		4109
D	STOP BAR, WHITE 24"		48

0 40' 80'

SCALE IN FEET

STATE OF ALASKA 49TH James Brown 14083 REGISTERED PROFESSIONAL ENGINEER

STATE OF ALASKA DEPARTMENT OF TRANSPORTATION AND PUBLIC FACILITIES
6860 GLACIER HIGHWAY, JUNEAU, AK 99811
(907)465-1763

KTN ROOSEVELT DRIVE & FRANKLIN ROAD PAVEMENT REHABILITATION

STRIPING

FILE Q:\Ktn\68663\EN\Dwgs\Sheets\68663_H1-H6_STRIPING.dwg | DATE 8/15/2016 9:23 | LAYOUT H1 | DESIGNED DD | CHECKED JB, LC | DRAFTED DD, JT

HMF 3.18.20

NO.	DATE	REVISION	STATE	PROJECT DESIGNATION	YEAR	SHEET NO.	TOTAL SHEETS
			ALASKA	Z686630000	2016	H2	55

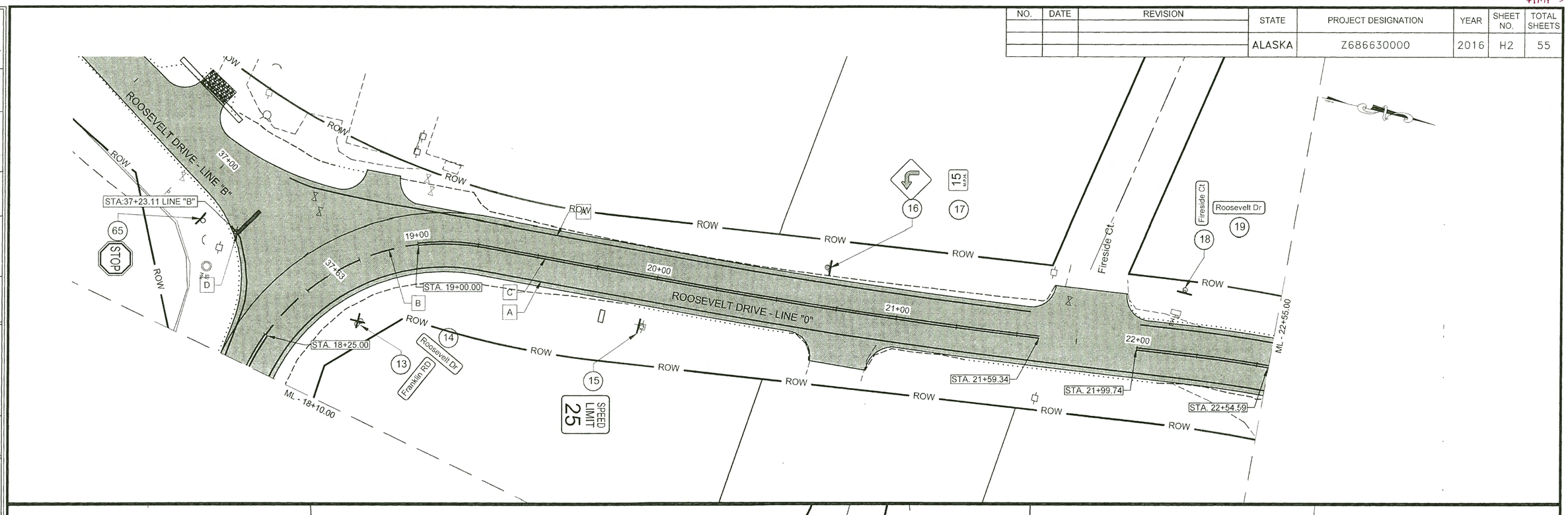

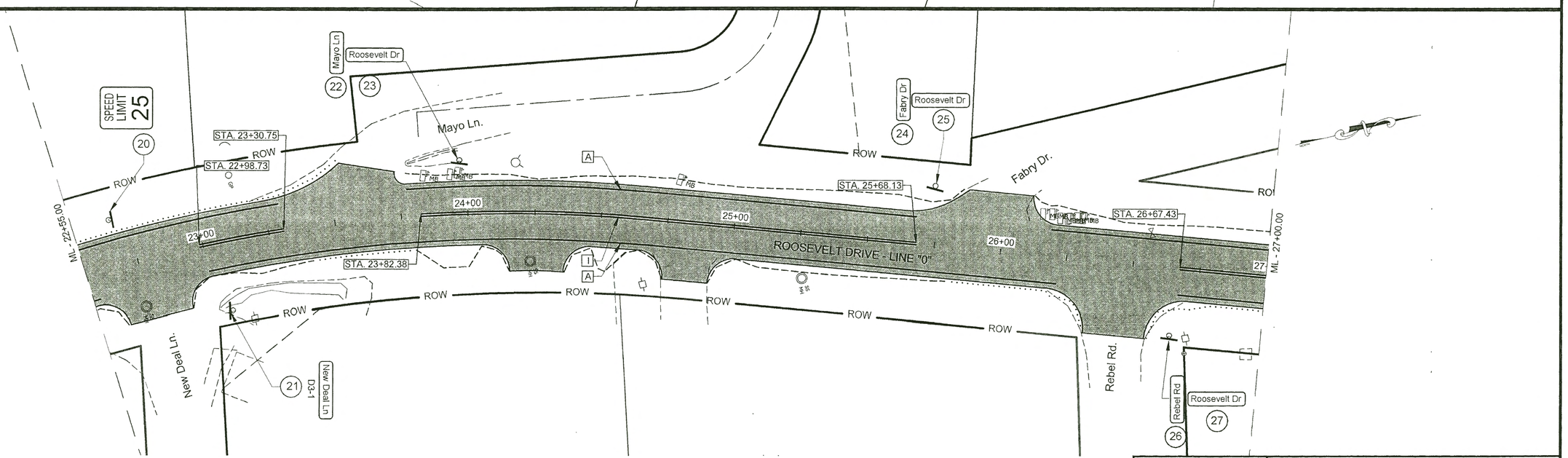

STRIPING LEGEND

SYMBOL	DESCRIPTION	PATTERN	L.F.
A	SOLID, WHITE 4"		8730
B	BROKEN, YELLOW 4"	2' 6' 2'	75
C	SOLID DOUBLE, YELLOW 4"		4109
D	STOP BAR, WHITE 24"		48

0 40' 80'

SCALE IN FEET

STATE OF ALASKA 49TH James Brown 14083 REGISTERED PROFESSIONAL ENGINEER

STATE OF ALASKA DEPARTMENT OF TRANSPORTATION AND PUBLIC FACILITIES
6860 GLACIER HIGHWAY, JUNEAU, AK 99811
(907)465-1763

KTN ROOSEVELT DRIVE & FRANKLIN ROAD PAVEMENT REHABILITATION

STRIPING

FILE Q:\Ktn\68663\EN\Dwgs\Sheets\68663_H1-H6_STRIPING.dwg | DATE 8/15/2016 9:23 | LAYOUT H2 | DESIGNED DD | CHECKED JB, LC | DRAFTED DD, JT

HMF 3.18.20

NO.	DATE	REVISION	STATE	PROJECT DESIGNATION	YEAR	SHEET NO.	TOTAL SHEETS
			ALASKA	Z686630000	2016	H3	55

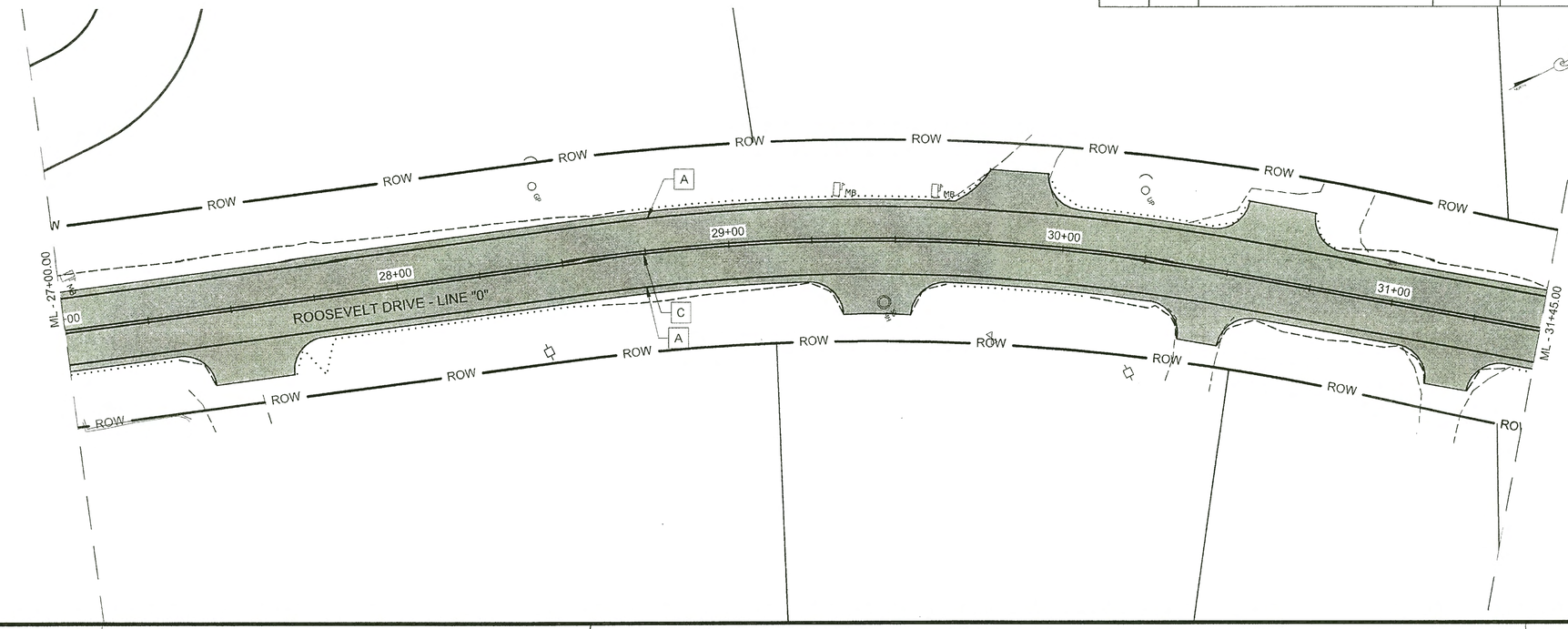

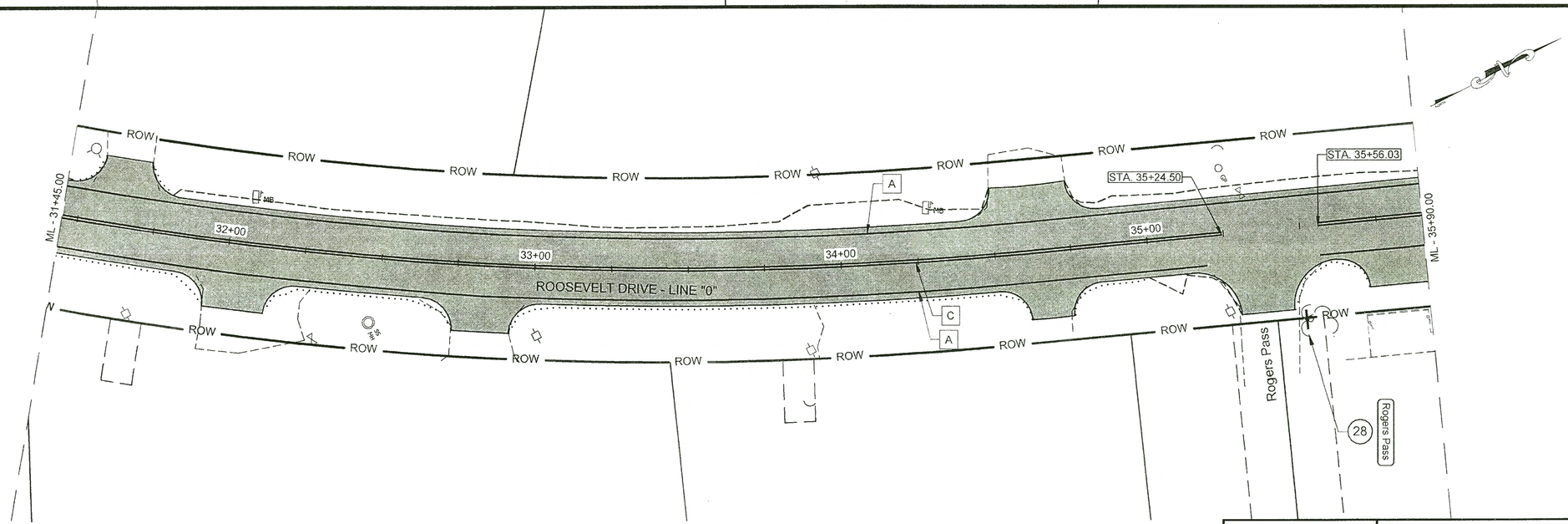

STRIPING LEGEND

SYMBOL	DESCRIPTION	PATTERN	L.F.
A	SOLID, WHITE 4"		8730
B	BROKEN, YELLOW 4"	2' 6' 2'	75
C	SOLID DOUBLE, YELLOW 4"		4109
D	STOP BAR, WHITE 24"		48

0 40' 80'

SCALE IN FEET

STATE OF ALASKA 49TH James Brown 14083 REGISTERED PROFESSIONAL ENGINEER

STATE OF ALASKA DEPARTMENT OF TRANSPORTATION AND PUBLIC FACILITIES
6860 GLACIER HIGHWAY, JUNEAU, AK 99811
(907)465-1763

KTN ROOSEVELT DRIVE & FRANKLIN ROAD PAVEMENT REHABILITATION

STRIPING

FILE	DATE	LAYOUT	DESIGNED	CHECKED	DRAFTED
Q:\Ktn\68663\EN\Dwgs\Sheets\68663_H1-H6_STRIPING.dwg	8/15/2016 9:23	H3	DD	JB, LC	DD, JT

HMF 3.18.20

NO.	DATE	REVISION	STATE	PROJECT DESIGNATION	YEAR	SHEET NO.	TOTAL SHEETS
			ALASKA	Z686630000	2016	H4	55

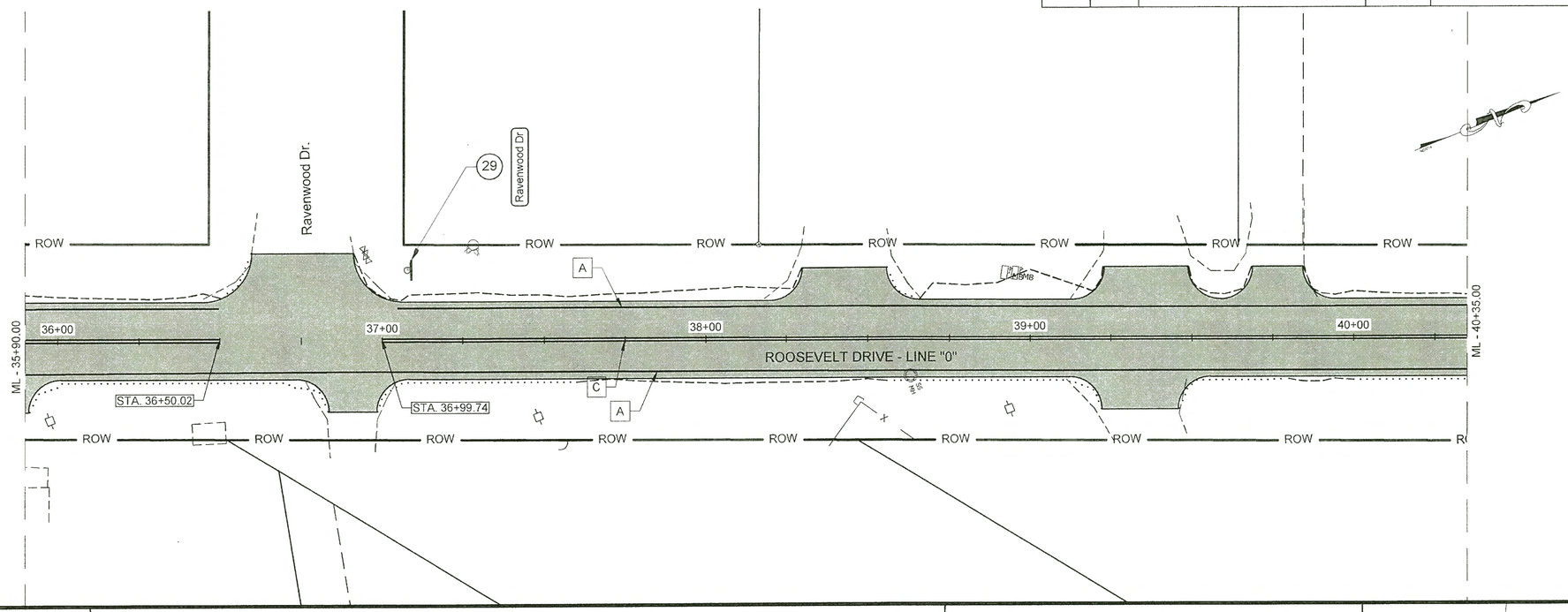

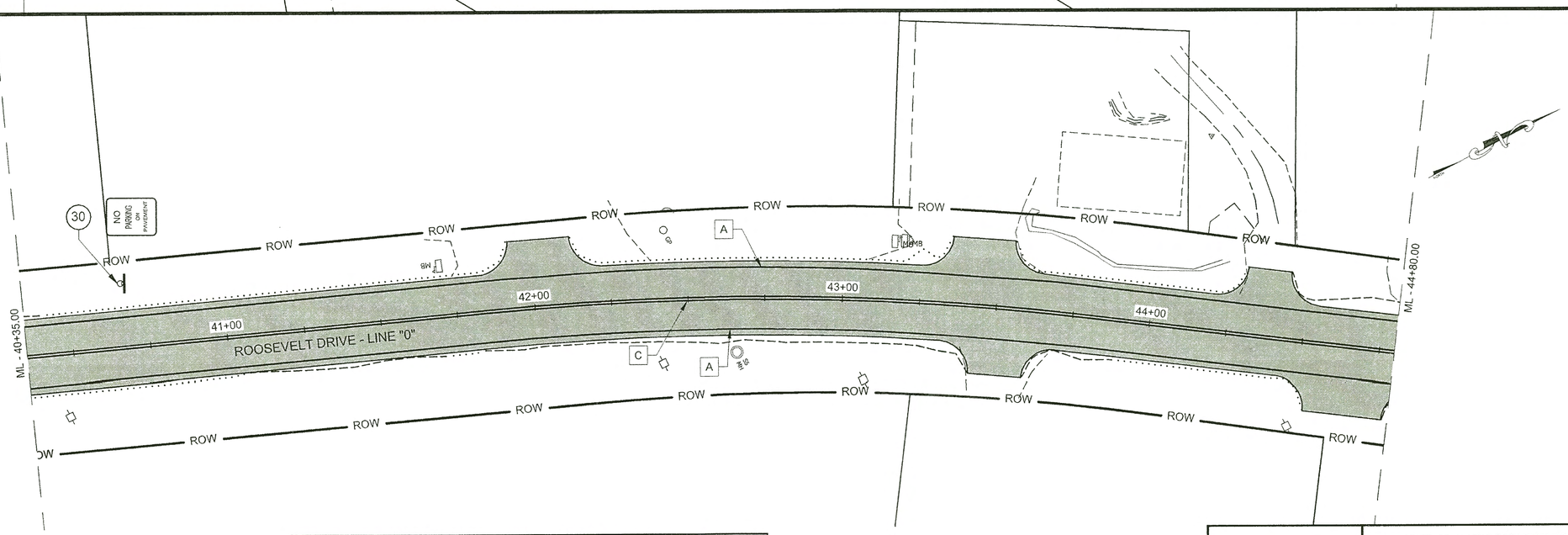

STRIPING LEGEND

SYMBOL	DESCRIPTION	PATTERN	L.F.
A	SOLID, WHITE 4"		8730
B	BROKEN, YELLOW 4"	2' 6' 2'	75
C	SOLID DOUBLE, YELLOW 4"		4109
D	STOP BAR, WHITE 24"		48

0 40' 80'

SCALE IN FEET

STATE OF ALASKA 49TH James Brown 14083 REGISTERED PROFESSIONAL ENGINEER

STATE OF ALASKA DEPARTMENT OF TRANSPORTATION AND PUBLIC FACILITIES
6860 GLACIER HIGHWAY, JUNEAU, AK 99811
(907)465-1763

KTN ROOSEVELT DRIVE & FRANKLIN ROAD PAVEMENT REHABILITATION

STRIPING

FILE Q:\Ktn\68663\EN\Dwgs\Sheets\68663_H1-H6_STRIPING.dwg | DATE 8/15/2016 9:23 | LAYOUT H4 | DESIGNED DD | CHECKED JB, LC | DRAFTED DD, JT

HPA 3.18.20

NO.	DATE	REVISION	STATE	PROJECT DESIGNATION	YEAR	SHEET NO.	TOTAL SHEETS
			ALASKA	Z686630000	2016	H5	55

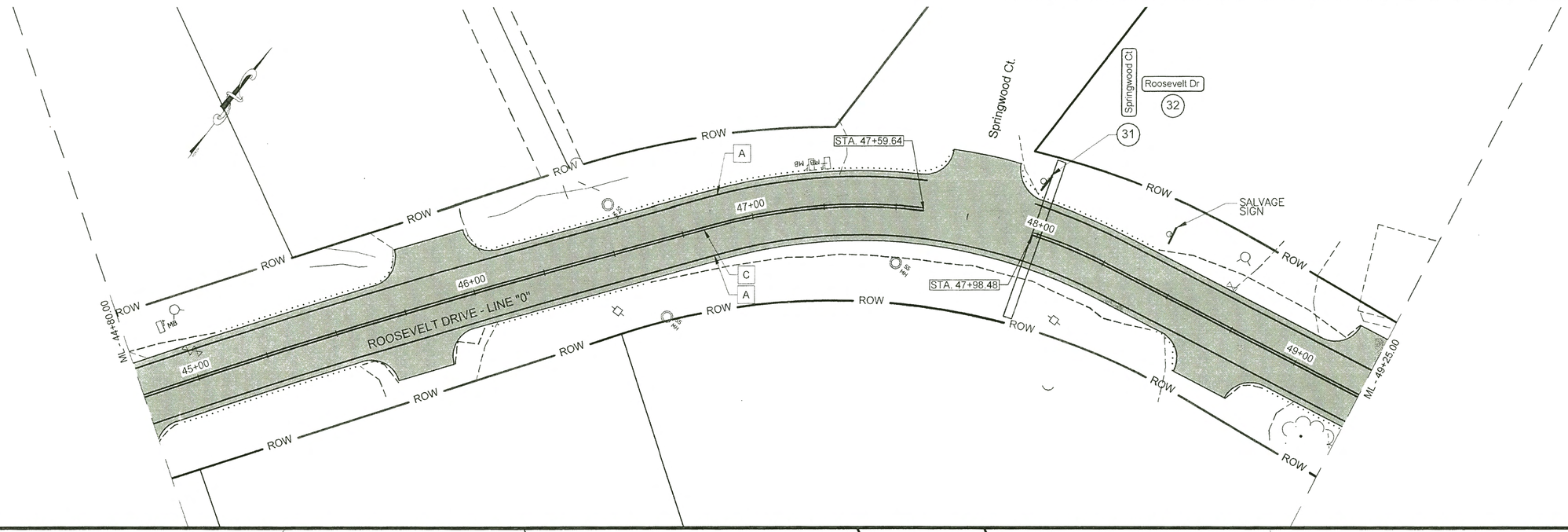

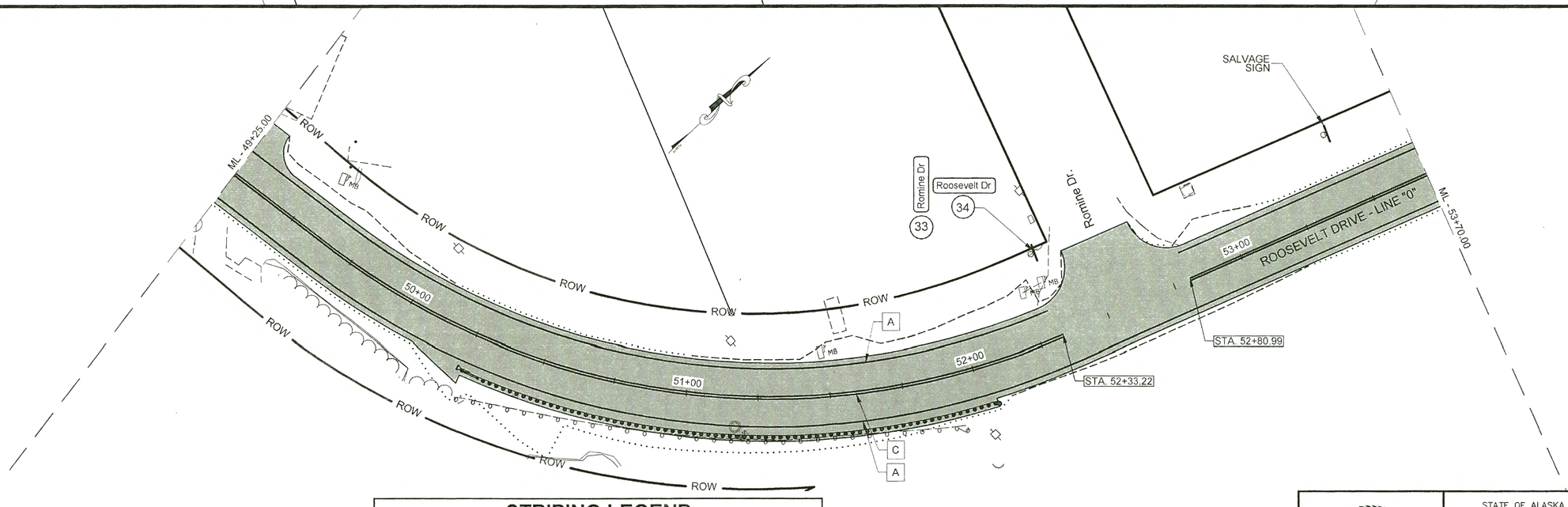

STRIPING LEGEND

SYMBOL	DESCRIPTION	PATTERN	L.F.
A	SOLID, WHITE 4"		8730
B	BROKEN, YELLOW 4"	2' – 6' – 2'	75
C	SOLID DOUBLE, YELLOW 4"		4109
D	STOP BARS, WHITE 24"		48

0 40' 80'

SCALE IN FEET

STATE OF ALASKA 49TH James Brown 14083 REGISTERED PROFESSIONAL ENGINEER

STATE OF ALASKA DEPARTMENT OF TRANSPORTATION AND PUBLIC FACILITIES
6860 GLACIER HIGHWAY, JUNEAU, AK 99811
(907)465-1763

KTN ROOSEVELT DRIVE & FRANKLIN ROAD PAVEMENT REHABILITATION

STRIPING

FILE Q:\Ktn\68663\EN\Dwgs\Sheets\68663_H1-H6_STRIPING.dwg | DATE 8/15/2016 9:23 | LAYOUT H5 | DESIGNED DD | CHECKED JB, LC | DRAFTED DD, JT

HMF 3.18.20

NO.	DATE	REVISION	STATE	PROJECT DESIGNATION	YEAR	SHEET NO.	TOTAL SHEETS
			ALASKA	Z686630000	2016	H6	55

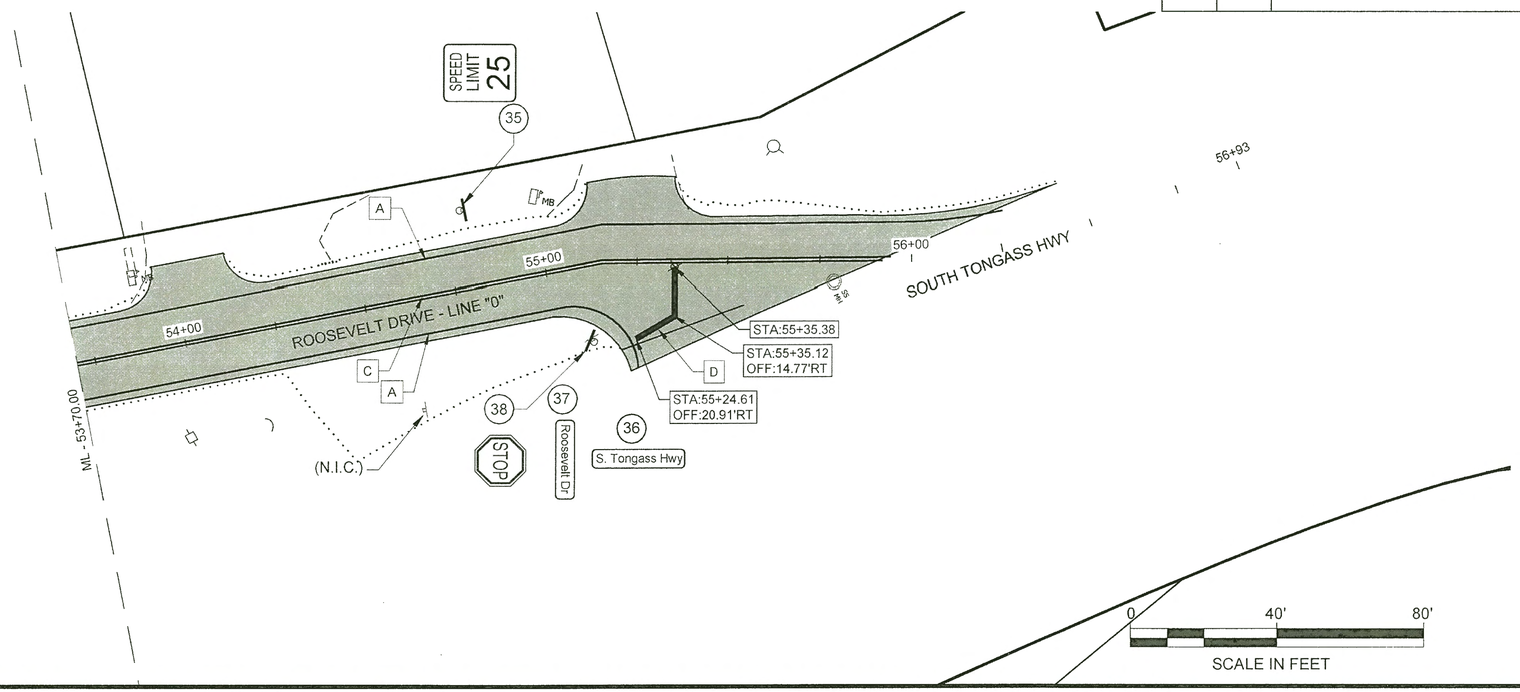

0 40' 80'
SCALE IN FEET

STRIPING LEGEND

SYMBOL	DESCRIPTION	PATTERN	L.F.
A	SOLID, WHITE 4"		8730
B	BROKEN, YELLOW 4"	2' 6' 2'	75
C	SOLID DOUBLE, YELLOW 4"		4109
D	STOP BAR, WHITE 24"		48

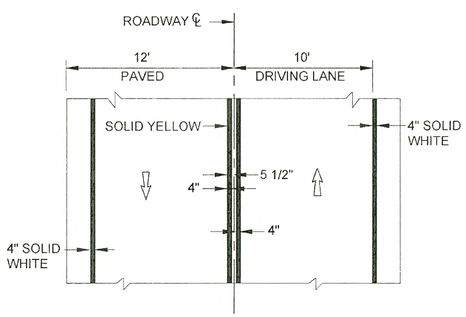

STRIPING DETAIL

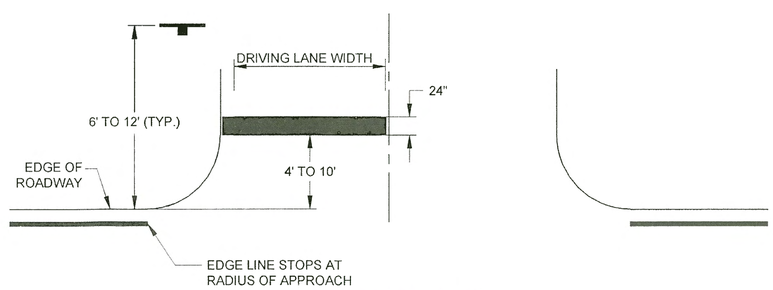

STOP BAR DETAIL

NOTES:

1. STOP SIGN IS OFFSET FROM APPROACH CENTERLINE PER S-05.01.
2. STRIPE TO CENTERLINE OF APPROACH.

STATE OF ALASKA 49TH James Brown 14083 REGISTERED PROFESSIONAL ENGINEER

STATE OF ALASKA DEPARTMENT OF TRANSPORTATION AND PUBLIC FACILITIES
6860 GLACIER HIGHWAY, JUNEAU, AK 99811
(907)465-1763

KTN ROOSEVELT DRIVE & FRANKLIN ROAD PAVEMENT REHABILITATION

STRIPING

FILE Q:\Ktn\68663\EN\Dwgs\Sheets\68663_H1-H6_STRIPING.dwg | DATE 8/15/2016 9:23 | LAYOUT H6 | DESIGNED DD | CHECKED JB, LC | DRAFTED DD, JT

HMF 3.18.20

NO.	DATE	REVISION	STATE	PROJECT DESIGNATION	YEAR	SHEET NO.	TOTAL SHEETS
			ALASKA	Z686630000	2016	H7	55

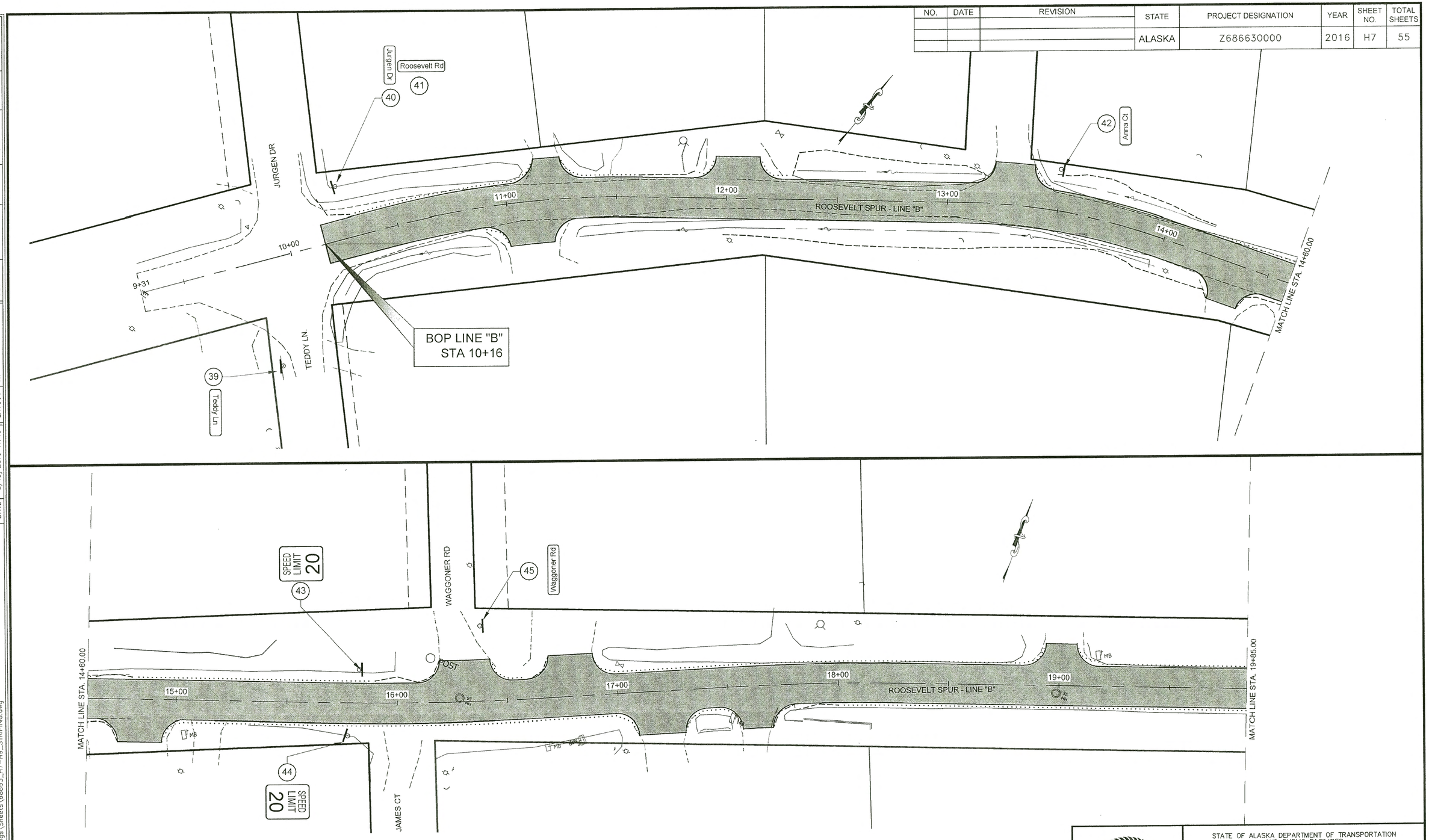

0 40' 80'

SCALE IN FEET

STATE OF ALASKA 49TH James Brown 14083 REGISTERED PROFESSIONAL ENGINEER

STATE OF ALASKA DEPARTMENT OF TRANSPORTATION AND PUBLIC FACILITIES
6860 GLACIER HIGHWAY, JUNEAU, AK 99811
(907)465-1763

KTN ROOSEVELT DRIVE & FRANKLIN ROAD PAVEMENT REHABILITATION

STRIPING

FILE Q:\Ktn\68663\EN\Dwgs\Sheets\68663_H7-H9_STRIPING.dwg | DATE 8/15/2016 11:43 | LAYOUT H7 | DESIGNED DD | CHECKED JB, LC | DRAFTED JT

HMF 318.20

NO.	DATE	REVISION	STATE	PROJECT DESIGNATION	YEAR	SHEET NO.	TOTAL SHEETS
			ALASKA	Z686630000	2016	H8	55

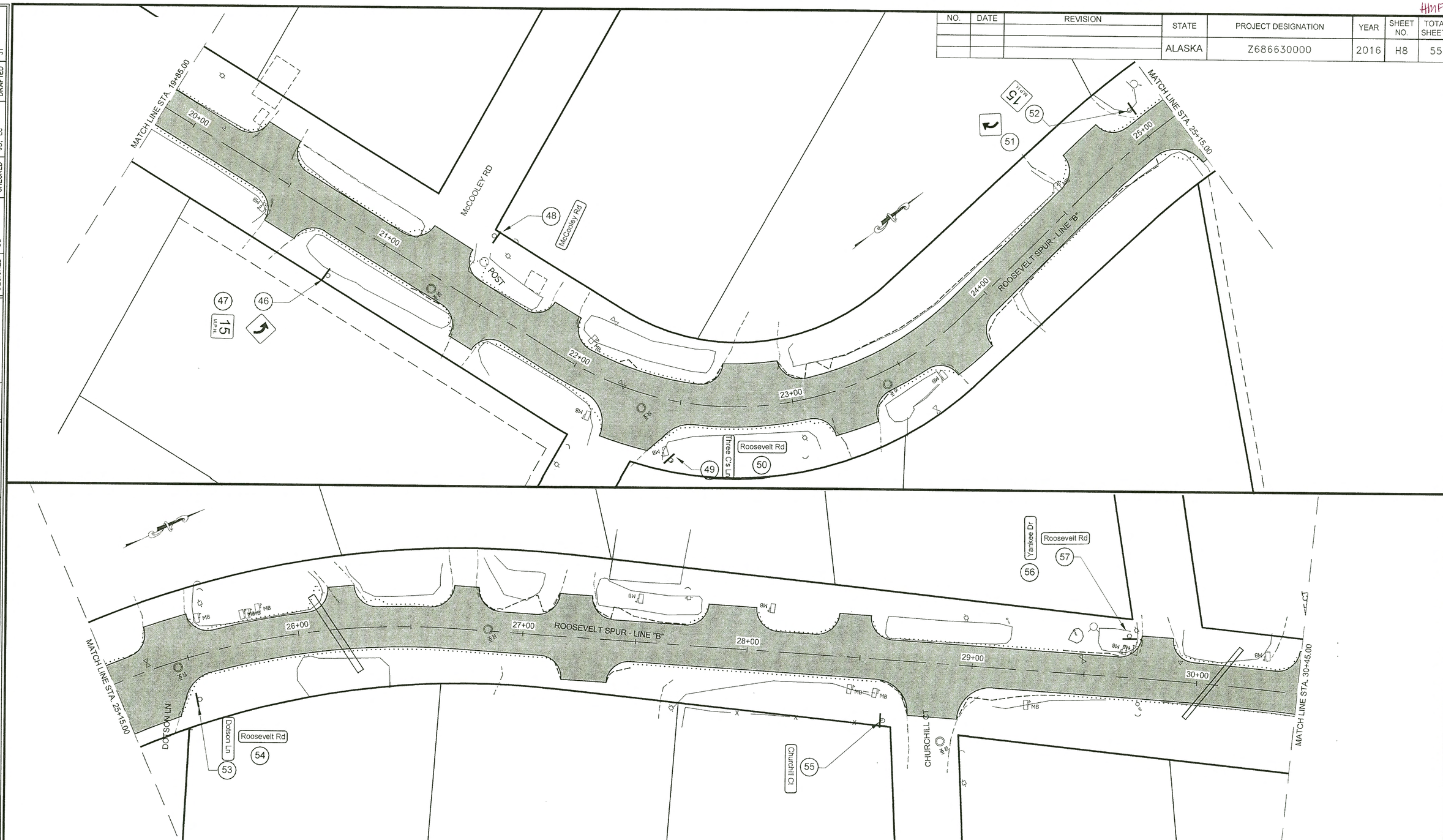

STATE OF ALASKA
49 TH
James Brown
14083
REGISTERED PROFESSIONAL ENGINEER

STATE OF ALASKA DEPARTMENT OF TRANSPORTATION AND PUBLIC FACILITIES
6860 GLACIER HIGHWAY, JUNEAU, AK 99811
(907)465-1763

KTN ROOSEVELT DRIVE & FRANKLIN ROAD PAVEMENT REHABILITATION

STRIPING

FILE	DATE	LAYOUT	DESIGNED	CHECKED	DRAFTED
Q:\Ktn\68663\EN\Dwgs\Sheets\68663_H7-H9_STRIPING.dwg	8/15/2016 11:43	H8	DD	JB, LC	JT

HMF 3.18.20

NO.	DATE	REVISION	STATE	PROJECT DESIGNATION	YEAR	SHEET NO.	TOTAL SHEETS
			ALASKA	Z686630000	2016	H9	55

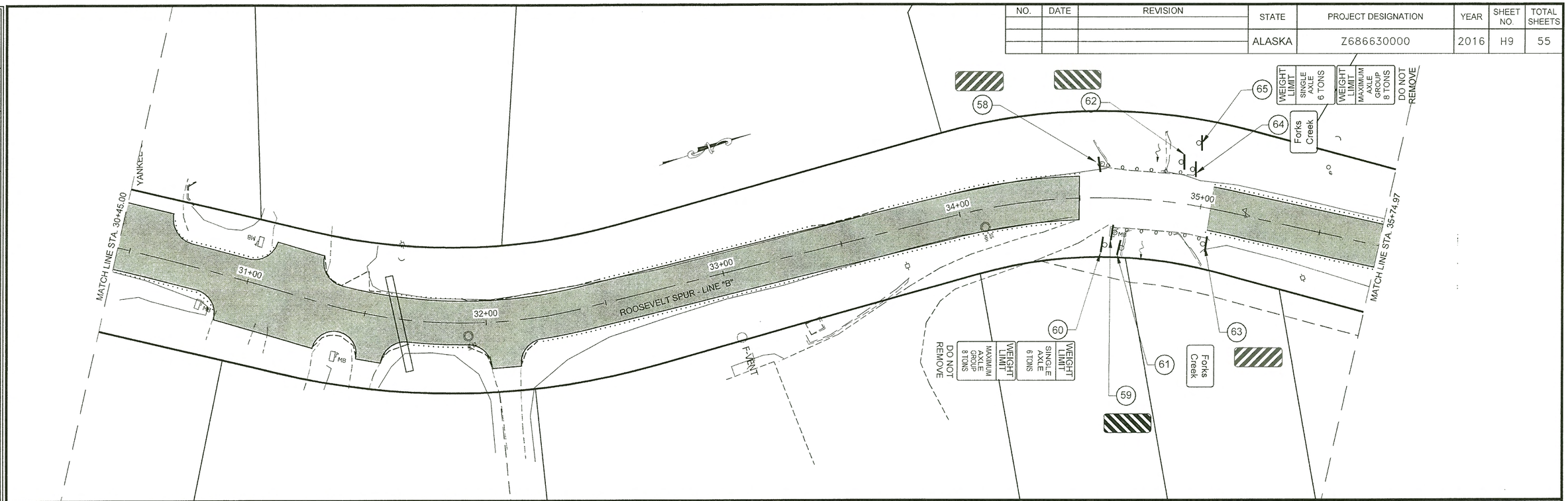

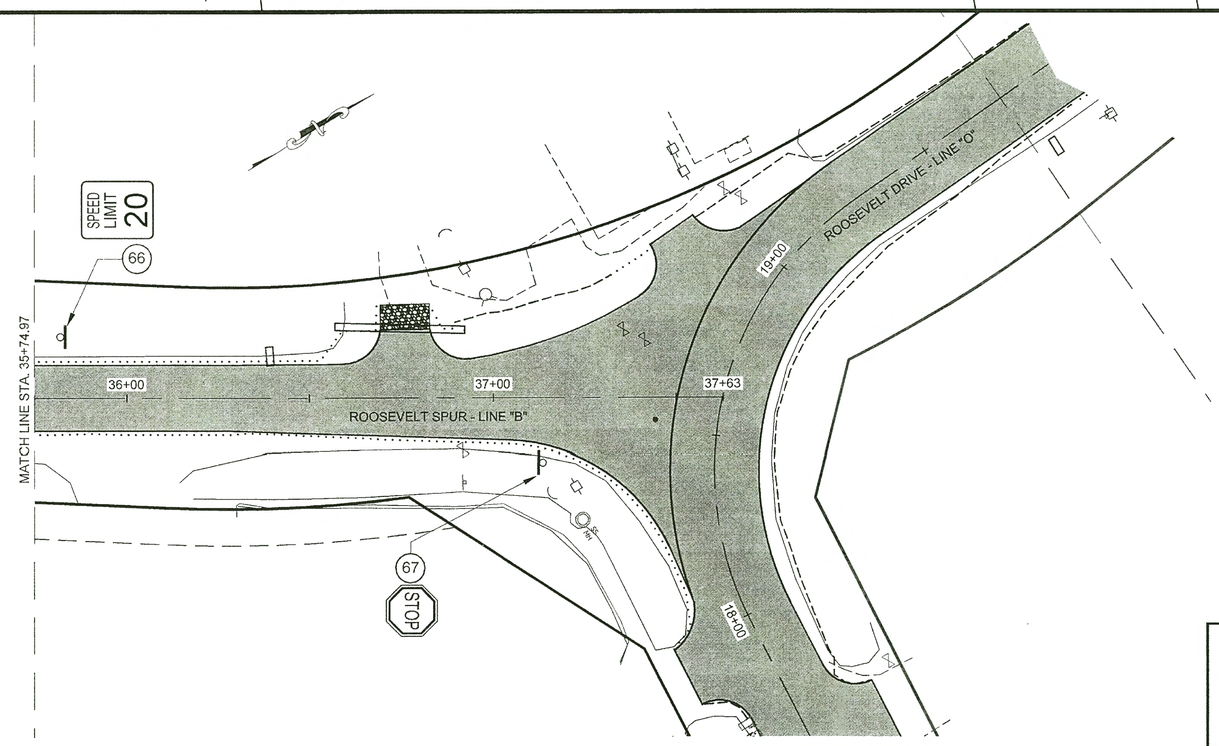

0 40' 80'

SCALE IN FEET

STATE OF ALASKA 49TH JAMES BROWN 14083 REGISTERED PROFESSIONAL ENGINEER

STATE OF ALASKA DEPARTMENT OF TRANSPORTATION AND PUBLIC FACILITIES
6860 GLACIER HIGHWAY, JUNEAU, AK 99811
(907)465-1763

KTN ROOSEVELT DRIVE & FRANKLIN ROAD PAVEMENT REHABILITATION

STRIPING

FILE	DATE	LAYOUT	DESIGNED	CHECKED	DRAFTED
Q:\Ktn\68663\EN\Dwgs\Sheets\68663_H7-H9_STRIPING.dwg	8/15/2016 11:43	H9	DD	JB, LC	JT

HMF 3.18.20

NO.	DATE	REVISION	STATE	PROJECT DESIGNATION	YEAR	SHEET NO.	TOTAL SHEETS
			ALASKA	Z686630000	2016	P1	55

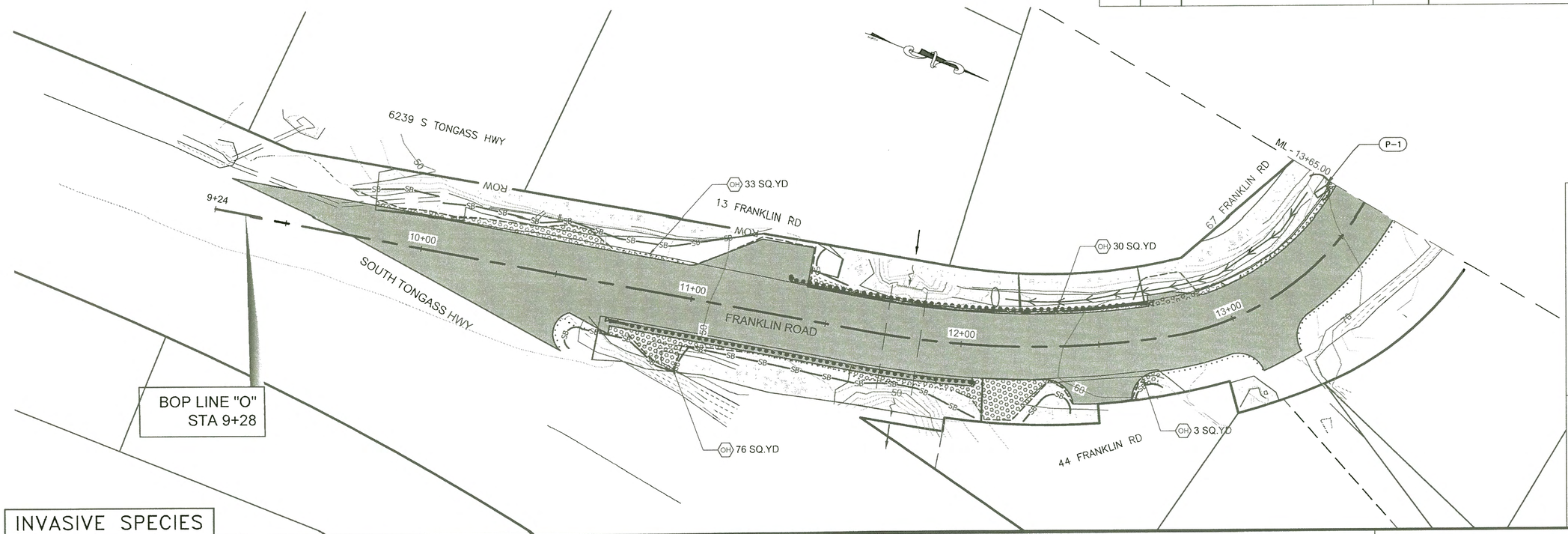

LEGEND

- CHECK DAM
- DISTURBED INVASIVES
- UNDISTURBED INVASIVES
- SEDIMENT BARRIER
- WATERS OF THE U.S.

ESCP NOT SEALED IN ACCORDANCE WITH ALASKA HIGHWAY PRECONSTRUCTION MANUAL SECTION 1120.7.3 DATED NOVEMBER 15, 2013

ESCP PLAN

INVASIVE SPECIES

NO.	COMMON NAME
JK	JAPANESE KNOTWEED
OH	ORANGE HAWKWEED
RC	REED CANARY GRASS

0 40' 80'

SCALE IN FEET

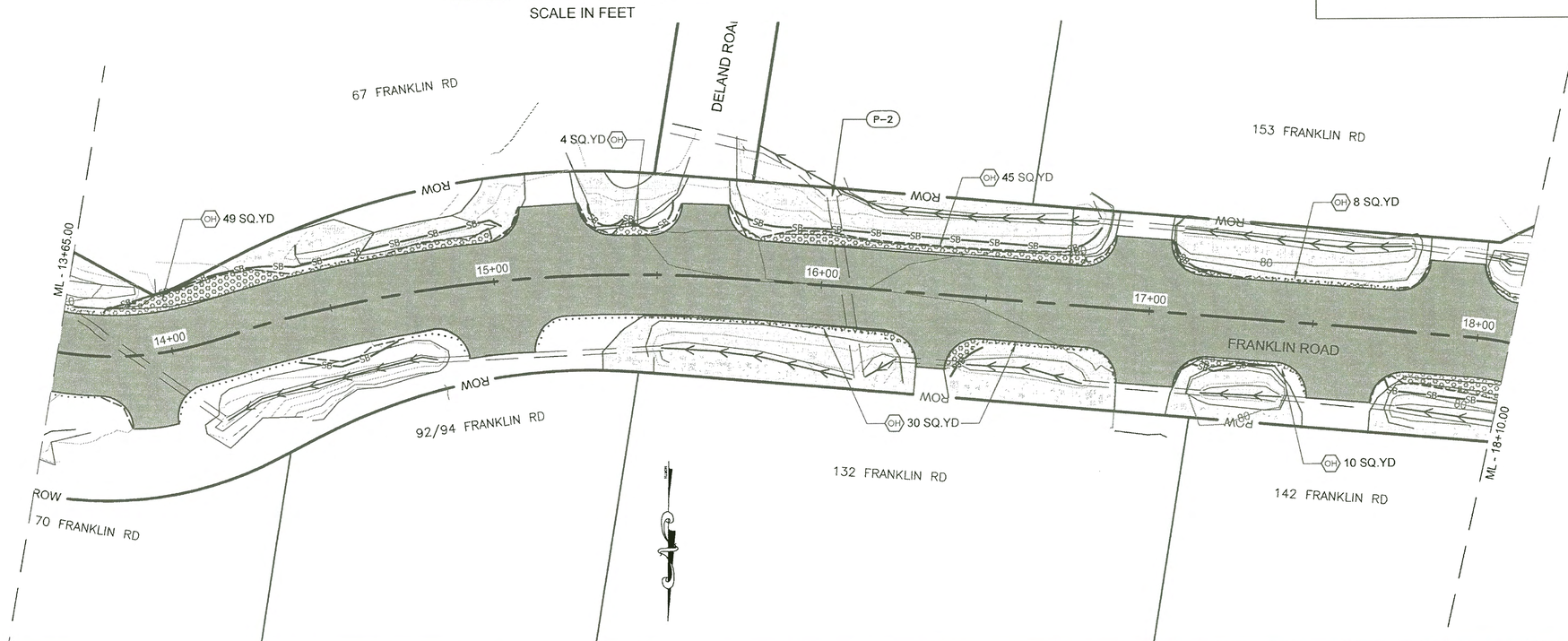

FILE Q:\Ktn\68663\EN\Dwgs\Sheets\68663_P1-P8 INV SPECIES.dwg | DATE 8/16/2016 16:12 | LAYOUT P1 | DESIGNED DD | CHECKED JB, LC | DRAFTED DD, JT

HMF 318.20

NO.	DATE	REVISION	STATE	PROJECT DESIGNATION	YEAR	SHEET NO.	TOTAL SHEETS
			ALASKA	Z686630000	2016	P2	55

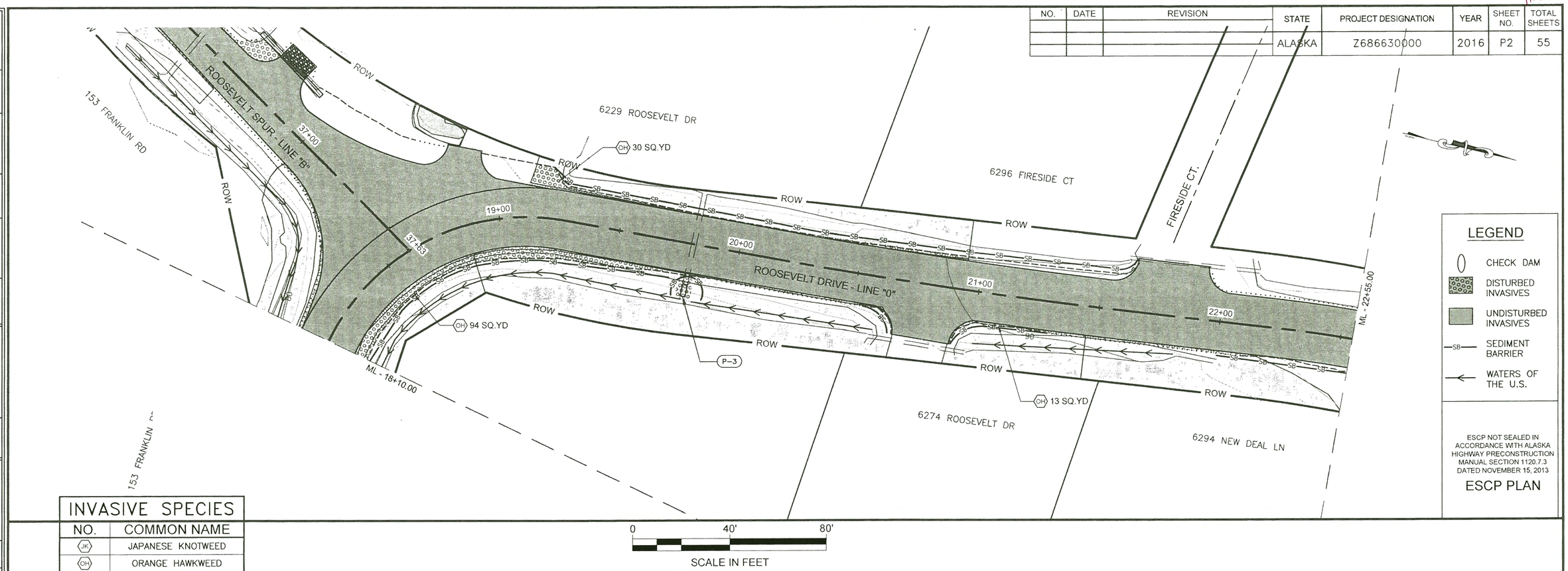

INVASIVE SPECIES

NO.	COMMON NAME
JK	JAPANESE KNOTWEED
OH	ORANGE HAWKWEED
RC	REED CANARY GRASS

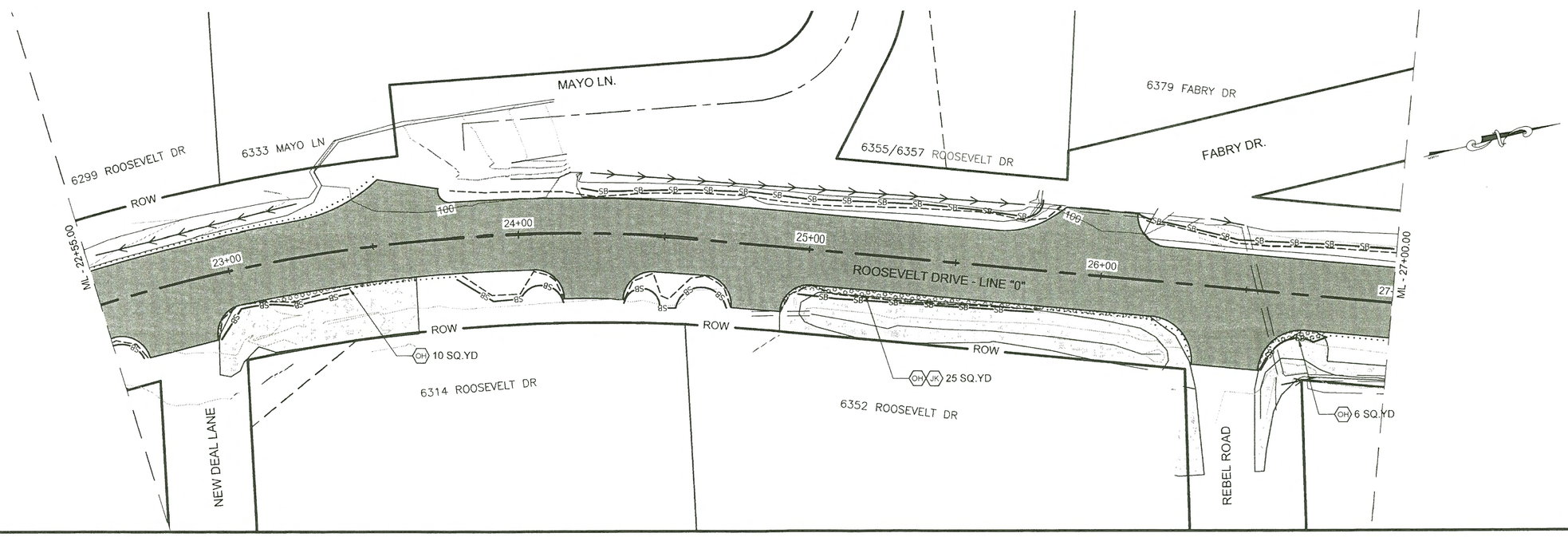

FILE	DATE	LAYOUT	DESIGNED	CHECKED	DRAFTED
Q:\Kin\68663\EN\Dwgs\Sheets\68663_P1-P8 INV SPECIES.dwg	8/16/2016 15:59	P2	DD	JB, LC	DD, JT

HMF 318.20

NO.	DATE	REVISION	STATE	PROJECT DESIGNATION	YEAR	SHEET NO.	TOTAL SHEETS
			ALASKA	Z686630000	2016	P3	55

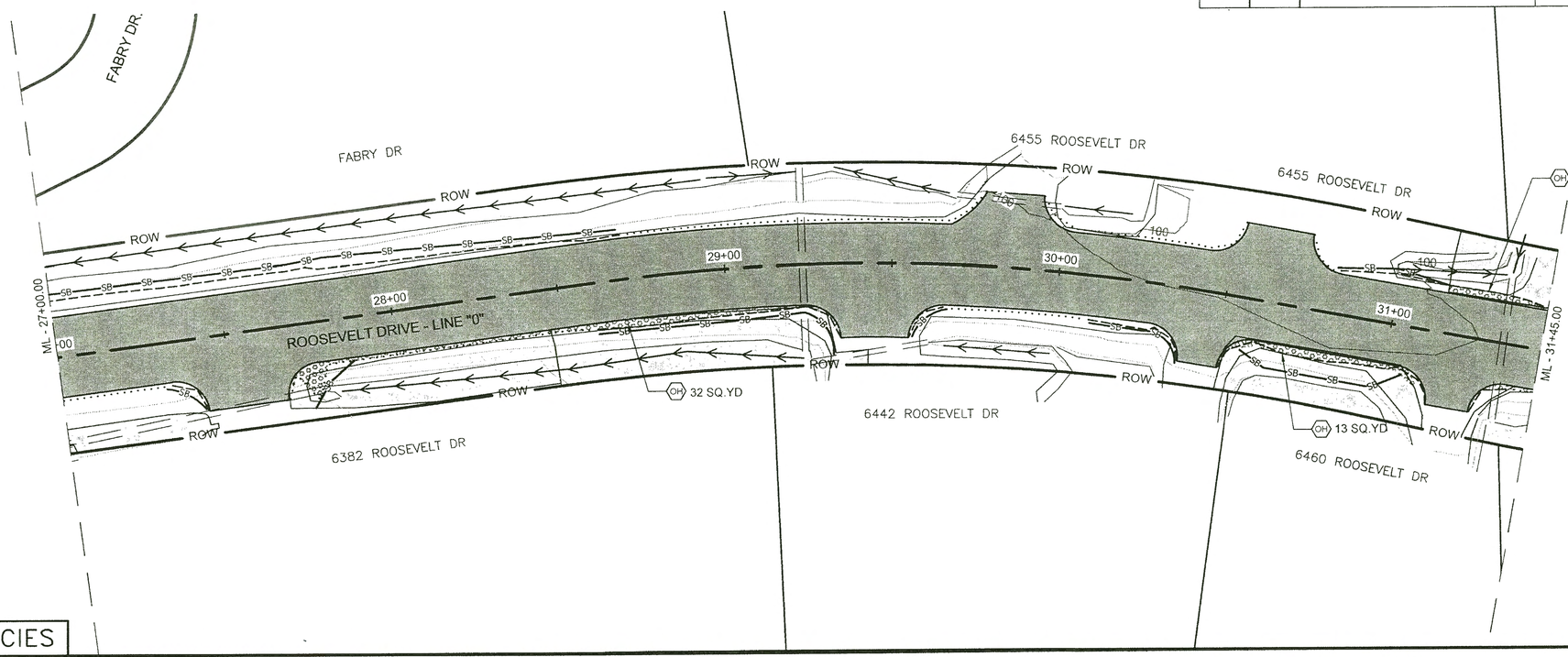

LEGEND

- CHECK DAM
- DISTURBED INVASIVES
- UNDISTURBED INVASIVES
- SEDIMENT BARRIER
- WATERS OF THE U.S.

ESCP NOT SEALED IN ACCORDANCE WITH ALASKA HIGHWAY PRECONSTRUCTION MANUAL SECTION 1120.7.3 DATED NOVEMBER 15, 2013

ESCP PLAN

INVASIVE SPECIES

NO.	COMMON NAME
JK	JAPANESE KNOTWEED
OH	ORANGE HAWKWEED
RC	REED CANARY GRASS

0 40' 80'

SCALE IN FEET

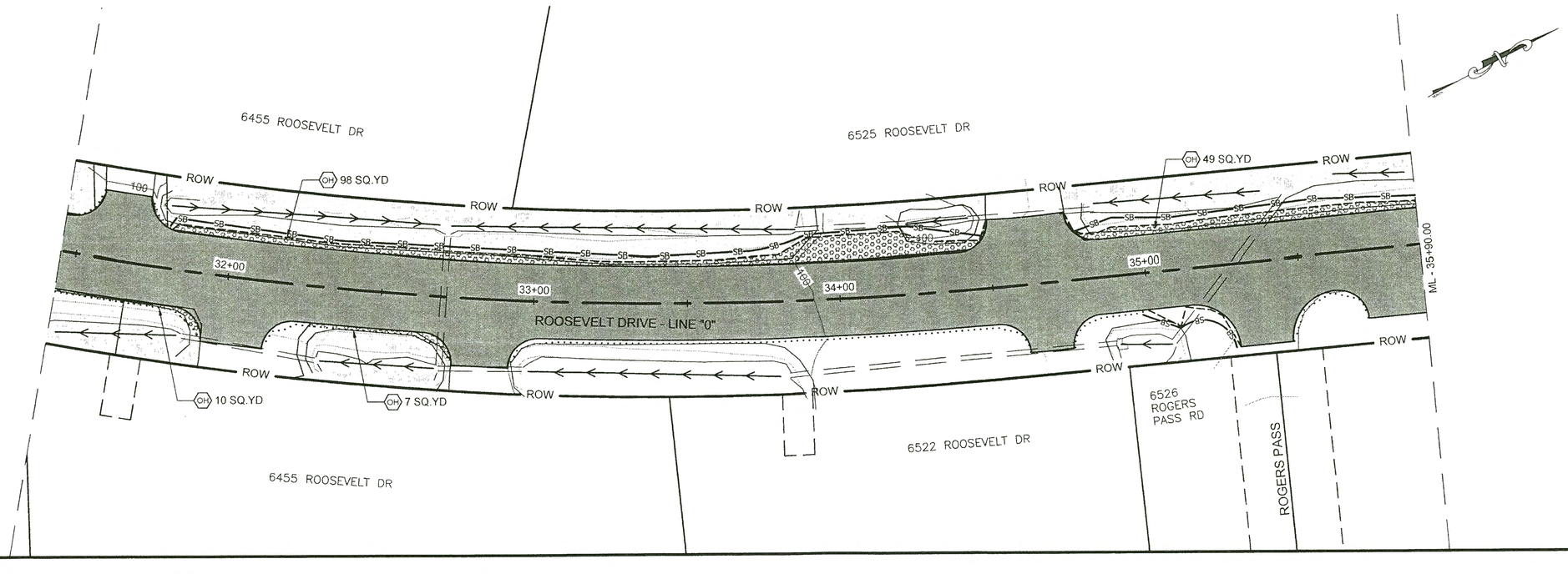

FILE	Q:\Kin\68663\EN\Dwgs\Sheets\68663_P1-P8 INV SPECIES.dwg	DATE	8/16/2016 15:59	LAYOUT	P3	DESIGNED	DD	CHECKED	JB, LC	DRAFTED	DD, JT

HMF 318.2D

NO.	DATE	REVISION

STATE	PROJECT DESIGNATION	YEAR	SHEET NO.	TOTAL SHEETS
ALASKA	Z686630000	2016	P4	55

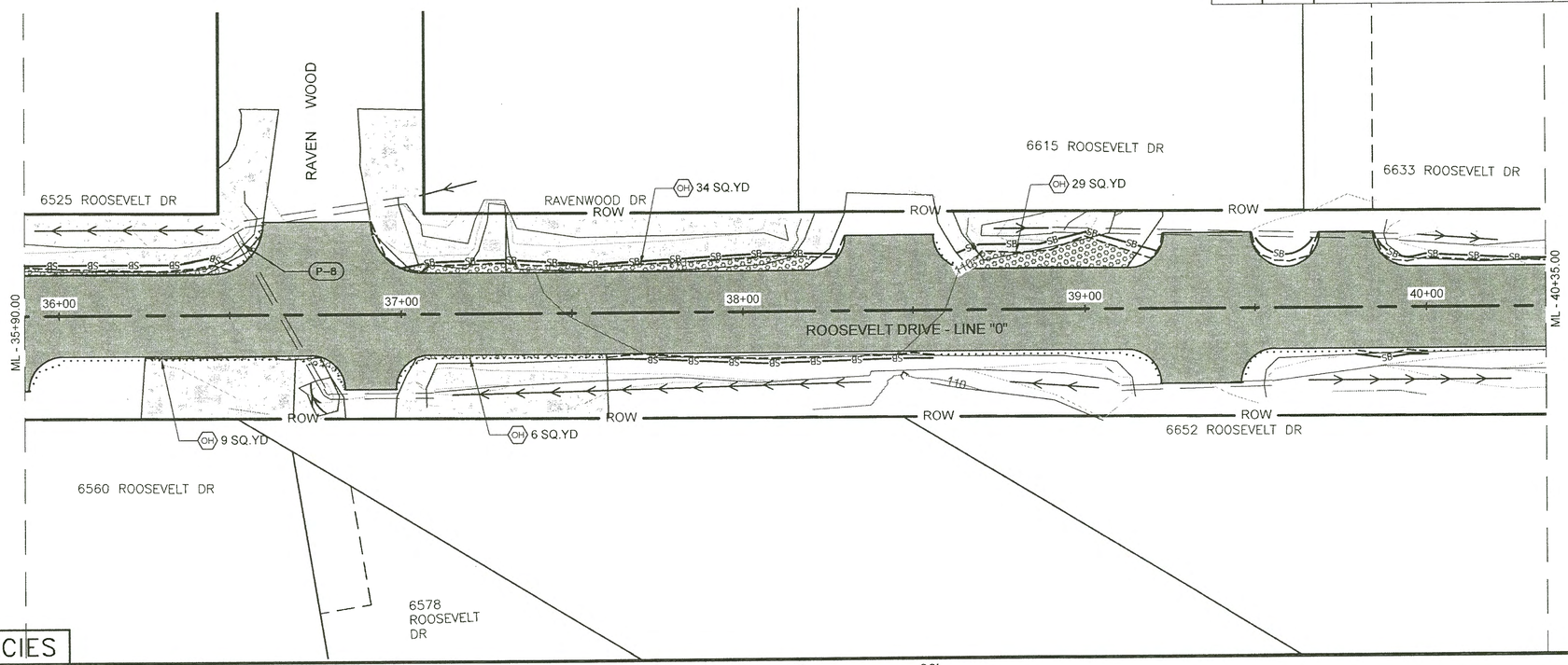

LEGEND

- CHECK DAM
- DISTURBED INVASIVES
- UNDISTURBED INVASIVES
- SEDIMENT BARRIER
- WATERS OF THE U.S.

ESCP NOT SEALED IN ACCORDANCE WITH ALASKA HIGHWAY PRECONSTRUCTION MANUAL SECTION 1120.7.3 DATED NOVEMBER 15, 2013

ESCP PLAN

INVASIVE SPECIES

NO.	COMMON NAME
JK	JAPANESE KNOTWEED
OH	ORANGE HAWKWEED
RC	REED CANARY GRASS

0 40' 80'

SCALE IN FEET

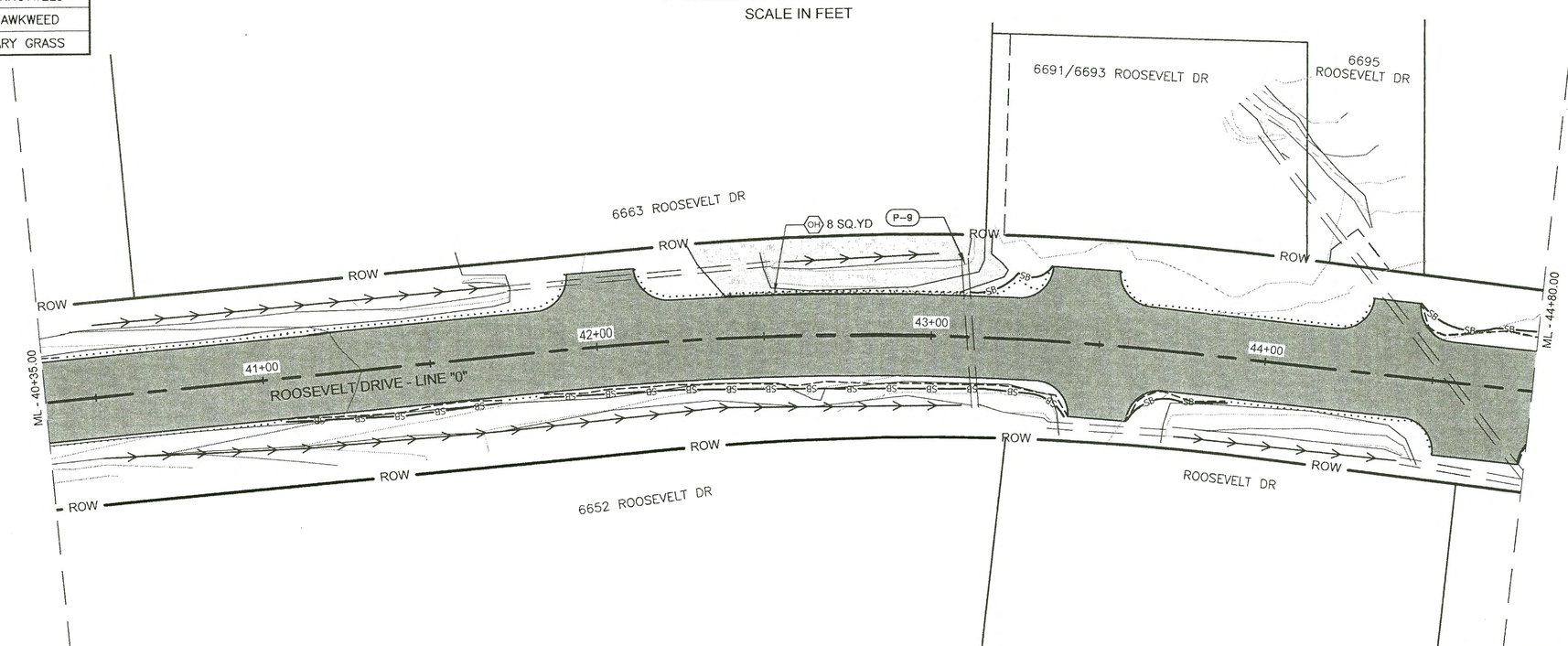

FILE	Q:\Ktn\68663\EN\Dwgs\Sheets\68663_P1-P8 INV SPECIES.dwg
DATE	8/16/2016 15:59
LAYOUT	P4
DESIGNED	DD
CHECKED	JB, LC
DRAFTED	DD, JT

HMF 3.18.20

NO.	DATE	REVISION	STATE	PROJECT DESIGNATION	YEAR	SHEET NO.	TOTAL SHEETS
			ALASKA	Z686630000	2016	P5	55

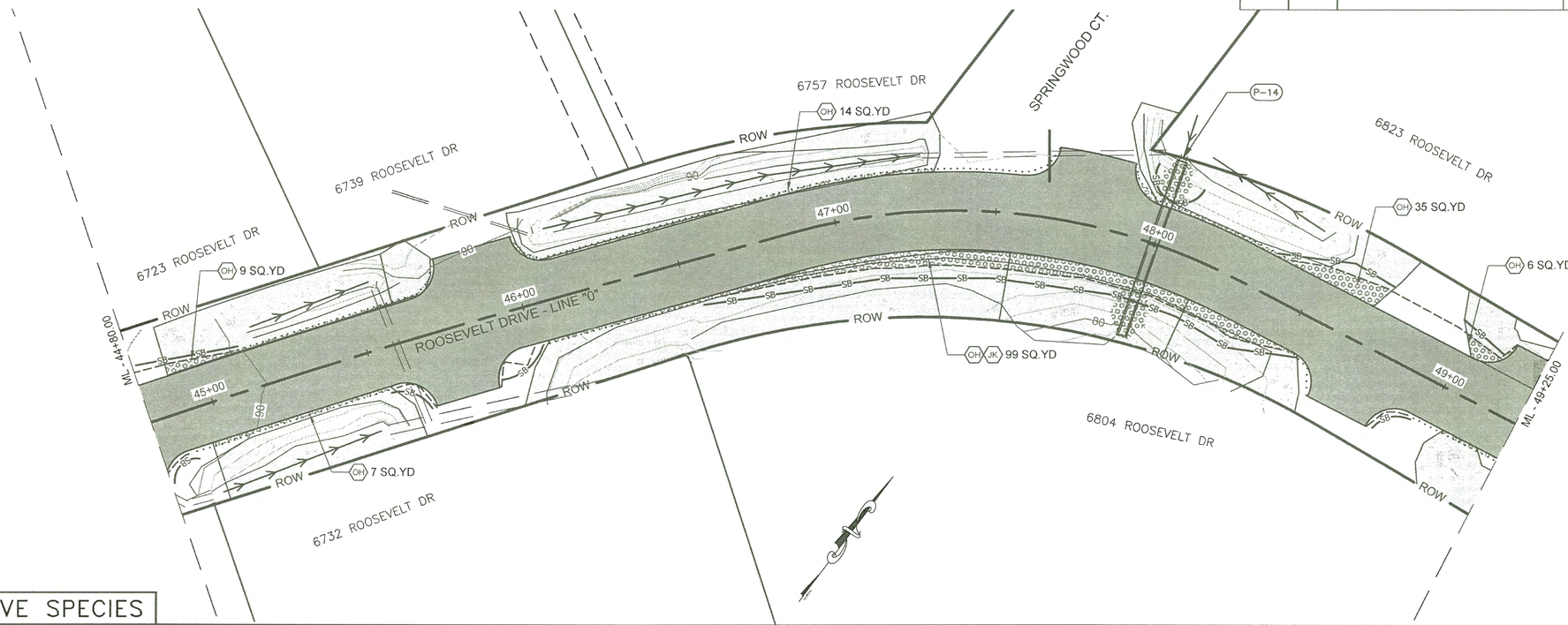

LEGEND

- CHECK DAM
- DISTURBED INVASIVES
- UNDISTURBED INVASIVES
- SEDIMENT BARRIER
- WATERS OF THE U.S.

ESCP NOT SEALED IN ACCORDANCE WITH ALASKA HIGHWAY PRECONSTRUCTION MANUAL SECTION 1120.7.3 DATED NOVEMBER 15, 2013

ESCP PLAN

INVASIVE SPECIES

NO.	COMMON NAME
JK	JAPANESE KNOTWEED
OH	ORANGE HAWKWEED
RC	REED CANARY GRASS

0 40' 80'

SCALE IN FEET

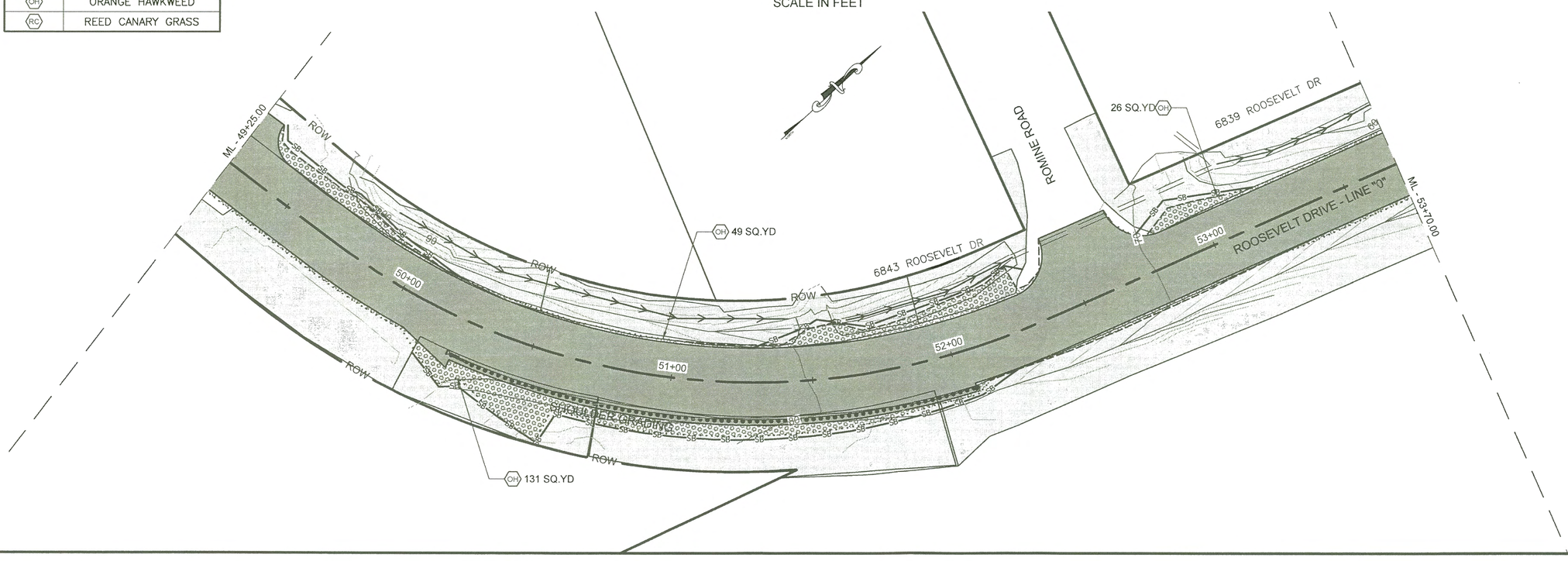

FILE Q:\Ktn\68663\EN\Dwgs\Sheets\68663_P1-P8 INV SPECIES.dwg | DATE 8/16/2016 15:59 | LAYOUT P5 | DESIGNED DD | CHECKED JB, LC | DRAFTED DD, JT

HMF 3182D

NO.	DATE	REVISION

STATE	PROJECT DESIGNATION	YEAR	SHEET NO.	TOTAL SHEETS
ALASKA	Z686630000	2016	P6	55

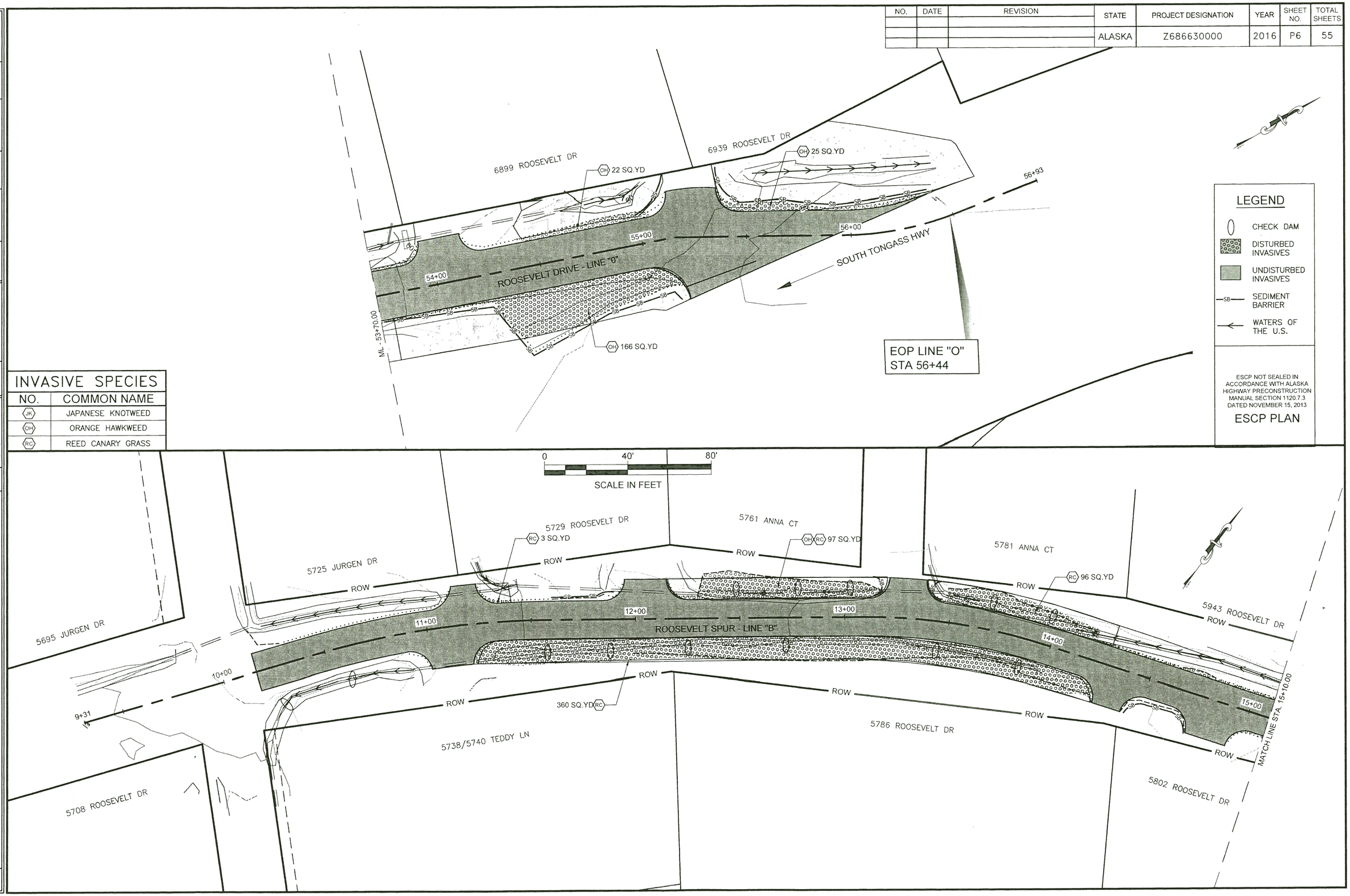

INVASIVE SPECIES

NO.	COMMON NAME
JK	JAPANESE KNOTWEED
OH	ORANGE HAWKWEED
RC	REED CANARY GRASS

FILE	DATE	LAYOUT	DESIGNED	CHECKED	DRAFTED
Q:\Ktn\68663\EN\Dwgs\Sheets\68663_P1_P8 INV SPECIES.dwg	8/16/2016 15:59	P6	DD	JB, LC	DD, JT

HMF 3/18/20

NO.	DATE	REVISION	STATE	PROJECT DESIGNATION	YEAR	SHEET NO.	TOTAL SHEETS
			ALASKA	Z686630000	2016	P7	55

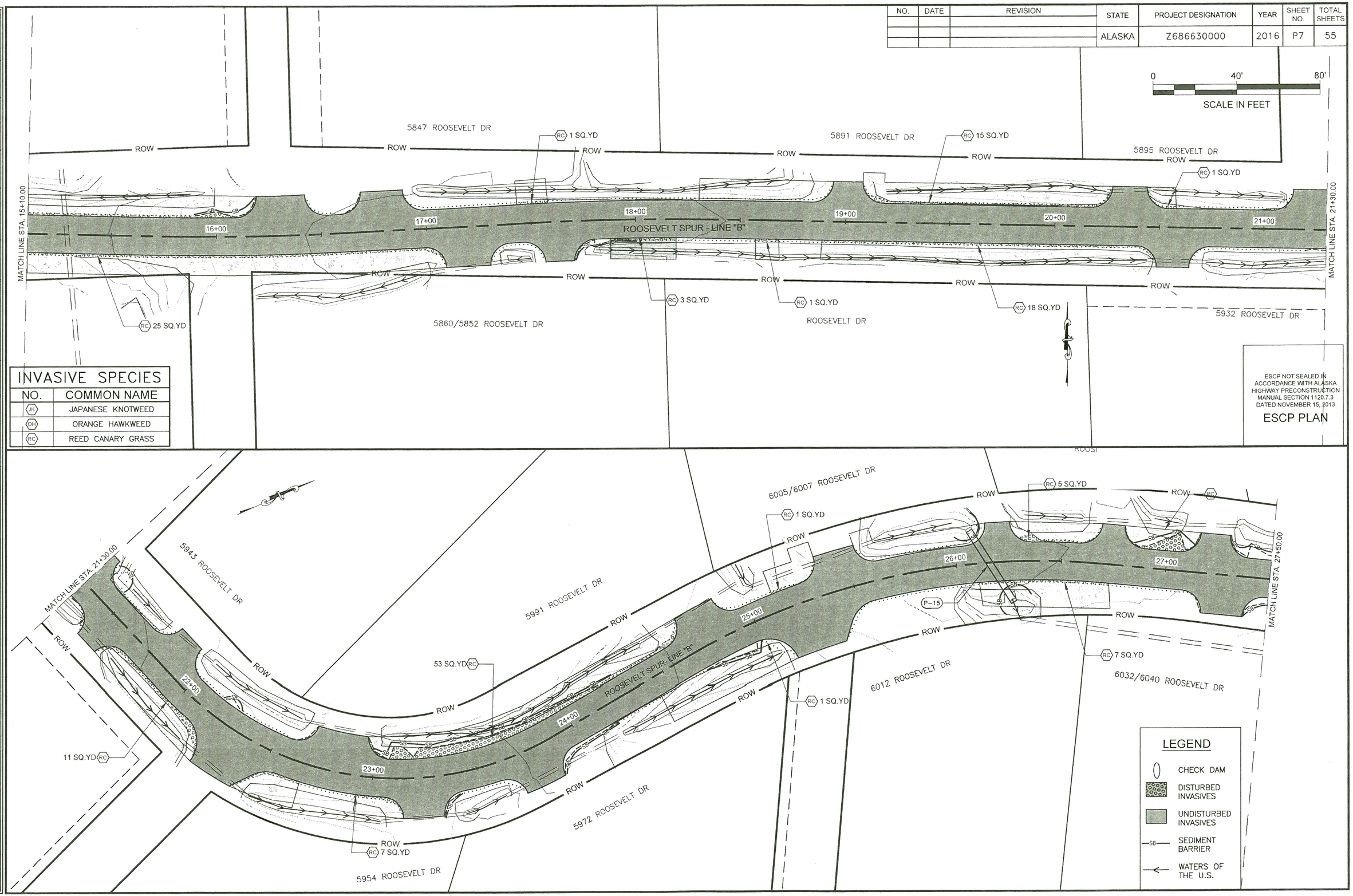

FILE Q:\K(n\68663\EN\Dwgs\Sheets\68663_P1-P8 INV SPECIES.dwg | DATE 8/16/2016 15:59 | LAYOUT P7 | DESIGNED DD | CHECKED JB, LC | DRAFTED DD, JT

HMF 3.18.20

NO.	DATE	REVISION

STATE	PROJECT DESIGNATION	YEAR	SHEET NO.	TOTAL SHEETS
ALASKA	Z686630000	2016	P8	55

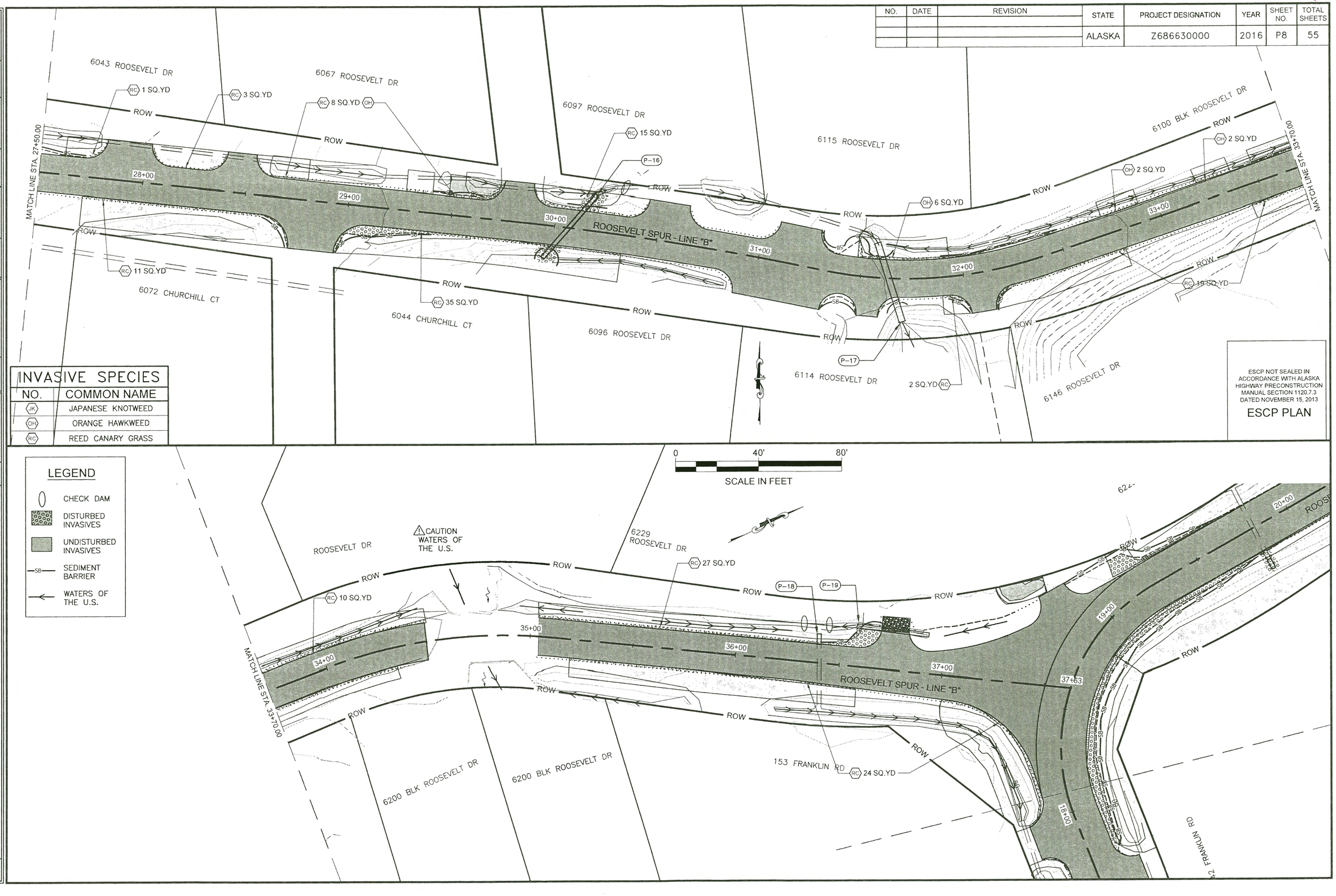

INVASIVE SPECIES

NO.	COMMON NAME
JK	JAPANESE KNOTWEED
OH	ORANGE HAWKWEED
RC	REED CANARY GRASS

LEGEND

- CHECK DAM
- DISTURBED INVASIVES
- UNDISTURBED INVASIVES
- SB — SEDIMENT BARRIER
- WATERS OF THE U.S.

FILE	DATE	LAYOUT	DESIGNED	CHECKED	DRAFTED
Q:\Ktn\68663\EN\Dwgs\Sheets\68663_P1-P8 INV SPECIES.dwg	8/16/2016 15:59	P8	DD	JB, LC	DD, JT

HMF 3/18/20

NO.	DATE	REVISION	STATE	PROJECT DESIGNATION	YEAR	SHEET NO.	TOTAL SHEETS
			ALASKA	Z686630000	2016	P9	55

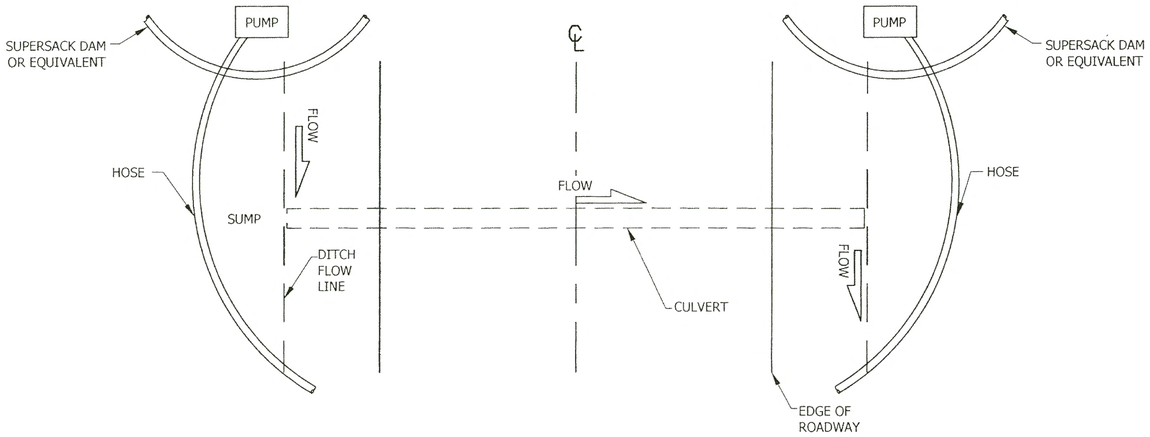

NOTE: DEWATER AND DISCHARGE MUST MEET WATER QUALITY STANDARDS.

CULVERT REPLACEMENT DEWATERING AND BMP INSTALLATION

NTS

SEDIMENT BAG NOTES:

1. DIVERT OR DEWATER DRAINAGE FROM CULVERT INLET AS NECESSARY TO CONDUCT CULVERT REPLACEMENT ACTIVITIES.
2. ONCE NEW CULVERT IS INSTALLED, REMOVE DOWN SLOPE SEDIMENT CONTROL BMP'S PRIOR TO REMOVING WATER DIVERSION/DEWATERING PUMP.
3. THE SEDIMENT BAG IS INTENDED TO CONTROL SEDIMENT DISCHARGE IN DEWATERING APPLICATIONS WHERE WATER IS BEING PUMPED
4. REPLACE THE UNIT WHEN ½ FULL OF SEDIMENT OR WHEN SEDIMENT HAS REDUCED THE FLOW RATE TO AN IMPRACTICAL RATE.

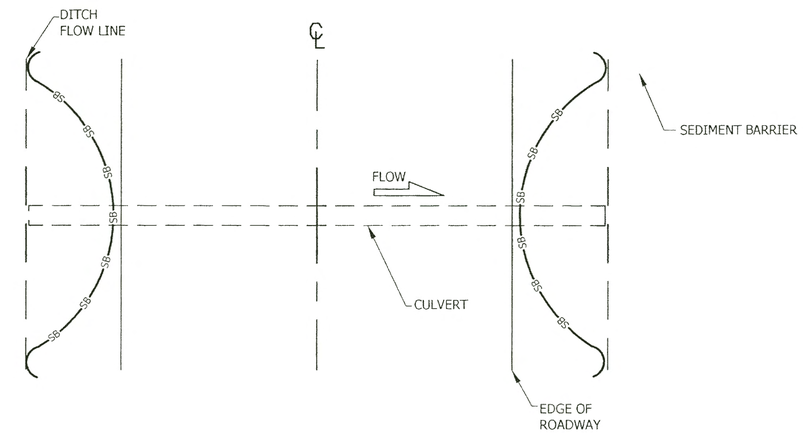

FIBER ROLL PLACEMENT AFTER CULVERT INSTALLATION

NTS

GENERAL NOTES:

1. CONTRACTOR IS RESPONSIBLE FOR THE INSTALLATION OF DOWNSLOPE PERIMETER CONTROL DURING CULVERT REPLACEMENT ACTIVITIES.
2. REFER TO APPENDIX B OF THE SPECIAL PROVISIONS FOR THE ENVIRONMENTAL COMMITMENTS.
3. THE LOCATIONS OF TEMPORARY EROSION & SEDIMENT POLLUTION CONTROLS ARE RECOMMENDATIONS. IT IS THE RESPONSIBILITY OF THE CONTRACTOR TO PREPARE AND IMPLEMENT A WQCP ACCORDING TO SECTION 641 OF THE SPECS.
4. INSTALL EROSION AND SEDIMENT CONTROL DEVICES BEFORE BEGINNING ANY GROUND DISTURBING ACTIVITIES. MAINTAIN BMP'S UNTIL THE AREA HAS REACHED FINAL STABILIZATION.
5. LAP ADJACENT FIBER ROLLS TO PREVENT SEDIMENT BYPASS. ANCHOR AS NECESSARY TO FIRMLY SECURE FIBER ROLLS AND PROVIDE CONTINUOUS CONTACT WITH THE SURFACE ON WHICH IT IS INSTALLED.
6. MAINTAIN DEVICES, MONITOR DAILY.
7. CHECK DAM LOCATIONS ARE APPROXIMATE, ADJUST FOR DITCH SLOPE AND DAM HEIGHT.

ESPC NOT SEALED IN ACCORDANCE WITH ALASKA HIGHWAY PRECONSTRUCTION MANUAL SECTION 1120.7.3 DATED NOVEMBER 15, 2013

STATE OF ALASKA DEPARTMENT OF TRANSPORTATION AND PUBLIC FACILITIES
6860 GLACIER HIGHWAY, JUNEAU, AK 99811
(907)465-1763

KTN ROOSEVELT DRIVE & FRANKLIN ROAD PAVEMENT REHABILITATION

ESCP DETAILS

FILE Q:\Kth68663\EN\Dwgs\Sheets\68663_P9_EROSION.dwg | DATE 3/6/2017 8:05 | LAYOUT P9 | DESIGNED DD | CHECKED JB, LC | DRAFTED DD, JT

HMF 3.18.20

NO.	DATE	REVISION	STATE	PROJECT DESIGNATION	YEAR	SHEET NO.	TOTAL SHEETS
			ALASKA	Z686630000	2016	T1	55

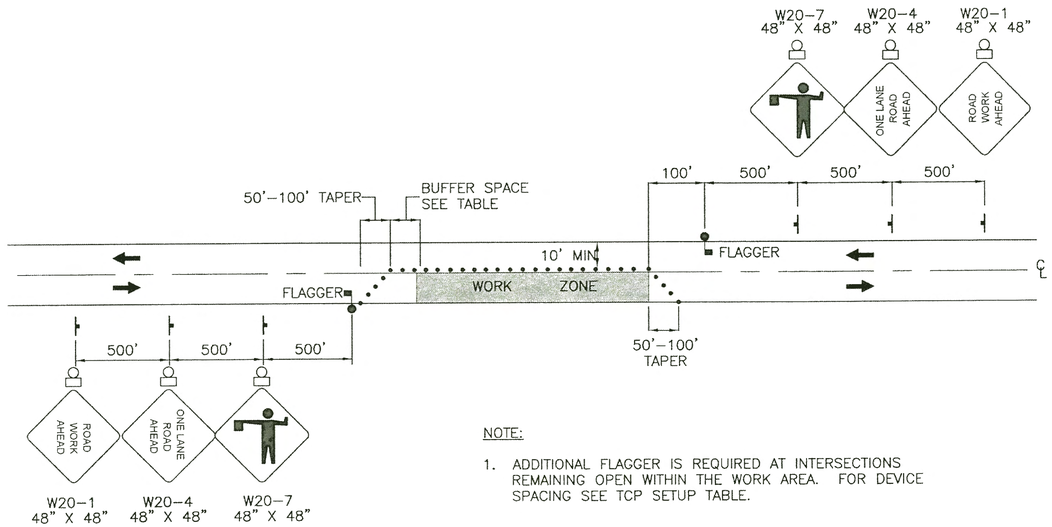

NOTE:

1. ADDITIONAL FLAGGER IS REQUIRED AT INTERSECTIONS REMAINING OPEN WITHIN THE WORK AREA. FOR DEVICE SPACING SEE TCP SETUP TABLE.

TWO LANE ROADWAY–SINGLE LANE CLOSURE

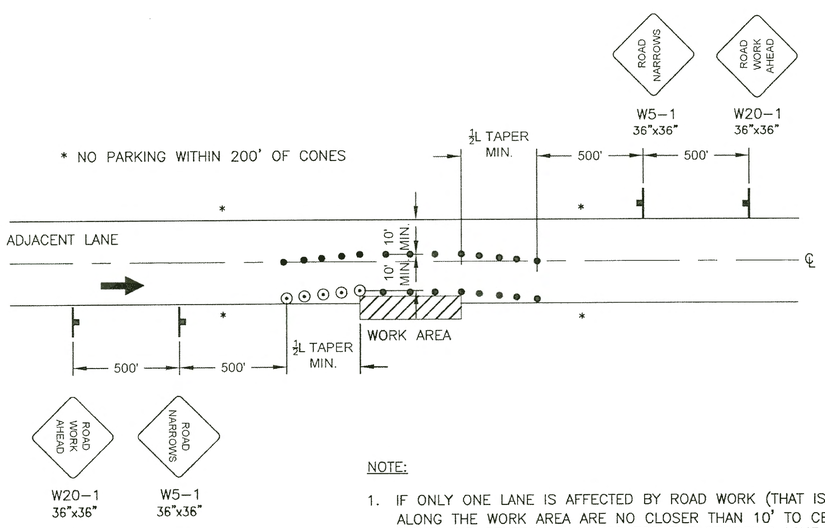

NOTE:

1. IF ONLY ONE LANE IS AFFECTED BY ROAD WORK (THAT IS, THE CONES ALONG THE WORK AREA ARE NO CLOSER THAN 10' TO CENTERLINE) THE SIGNS AND CENTERLINE CONES FOR THE OPPOSING LANE MAY BE DELETED.

ROADWAY ENCROACHMENT

TRAFFIC CONTROL NOTES:

1. TEMPORARY DRIVING LANES SHALL HAVE A MINIMUM WIDTH OF 10'–0".
2. CONSTRUCTION SIGNING SHALL BE IN PLACE ONLY WHEN THE CONDITIONS EXIST FOR WHICH THE SIGNS ARE INTENDED.
3. CHANNELIZATION DEVICES IF USED AT NIGHT SHALL BE LIT IN ACCORDANCE WITH THE ALASKA TRAFFIC MANUAL.
4. DRIVEWAYS MAY BE CLOSED DURING ACTUAL WORK ON A GIVEN DRIVEWAY, PROVIDED THAT THE CLOSURE DOES NOT EXCEED 4 HOURS AND THE AFFECTED RESIDENTS HAVE BEEN GIVEN 24 HOURS NOTICE OF THE CLOSURE.
5. IT IS THE INTENT OF THIS TRAFFIC CONTROL PLAN (TCP) TO ILLUSTRATE SOME, NOT ALL, OF THE TRAFFIC CONTROL SETUPS WHICH WILL BE REQUIRED ON THIS PROJECT. PLANS FOR CONFIGURATIONS NOT COVERED BY THE TCP SHALL BE CREATED BY THE CONTRACTOR AND SUBMITTED TO THE ENGINEER FOR APPROVAL. WHERE APPROPRIATE, THEY SHALL INCORPORATE APPLICABLE DETAILS FROM THESE SHEETS.
6. ALL TRAFFIC CONTROL PLANS SUBMITTED BY THE CONTRACTOR SHALL BE NUMBERED. ALL TRAFFIC CONTROL PLANS THAT USE A TYPICAL APPLICATION AS DESCRIBED IN THE MUTCD SHALL REFERENCE THE TYPICAL APPLICATION. EXAMPLE: TCP 3, MUTCD TA–10.

TCP SETUP TABLE

	MIN MERGING TAPER LENGTH (L) IN FEET			MIN NUMBER OF DEVICES WIDTH OF OFFSET (W) IN FEET			MAX DEVICE SPACING IN FEET		BUFFER SPACE
SPEED (MPH)	10'	11'	12'	10'	11'	12'	ALONG TAPER	ALONG TANGENT	(FT)
25 OR BELOW	105	115	125	6	6	6	25	50	155
35	205	225	245	7	8	8	35	70	250
50	500	550	600	11	12	13	50	100	425

LEGEND

- FLAGGER
- CONSTRUCTION SIGN
- DRUMS
- CONE
- WARNING LIGHT

TCP NOT SEALED IN ACCORDANCE WITH ALASKA HIGHWAY PRECONSTRUCTION MANUAL SECTION 1400.3.5 DATED JANUARY 30, 2012

STATE OF ALASKA DEPARTMENT OF TRANSPORTATION AND PUBLIC FACILITIES
6860 GLACIER HIGHWAY, JUNEAU, AK 99811
(907)465–1763

KTN ROOSEVELT DRIVE & FRANKLIN ROAD PAVEMENT REHABILITATION

TRAFFIC CONTROL

FILE Q:\Ktn\68663\EN\Dwgs\Sheets\68663_T1_TRAFFIC.dwg | DATE 3/3/2017 15:44 | LAYOUT T1 | DESIGNED DD | CHECKED JB, LC | DRAFTED DD, JT

AMF 3.18.20

NO.	DATE	REVISION	STATE	PROJECT DESIGNATION	YEAR	SHEET NO.	TOTAL SHEETS
			ALASKA	Z686630000	2016	T2	55

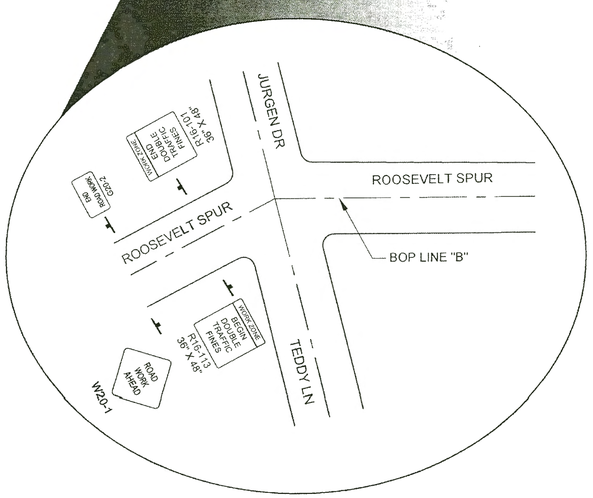

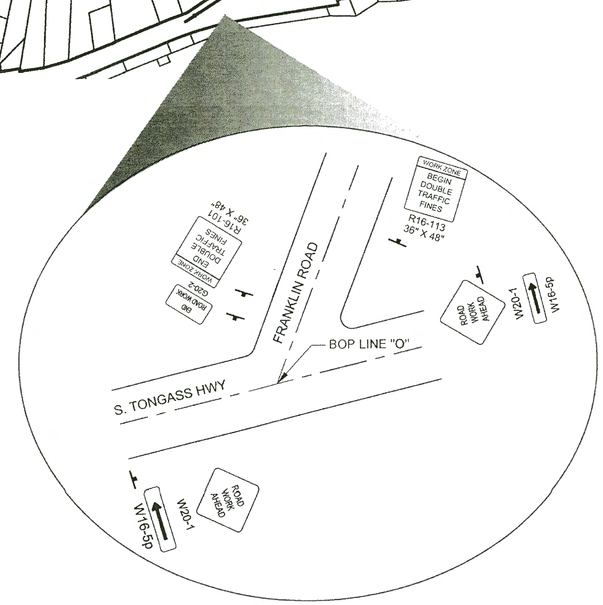

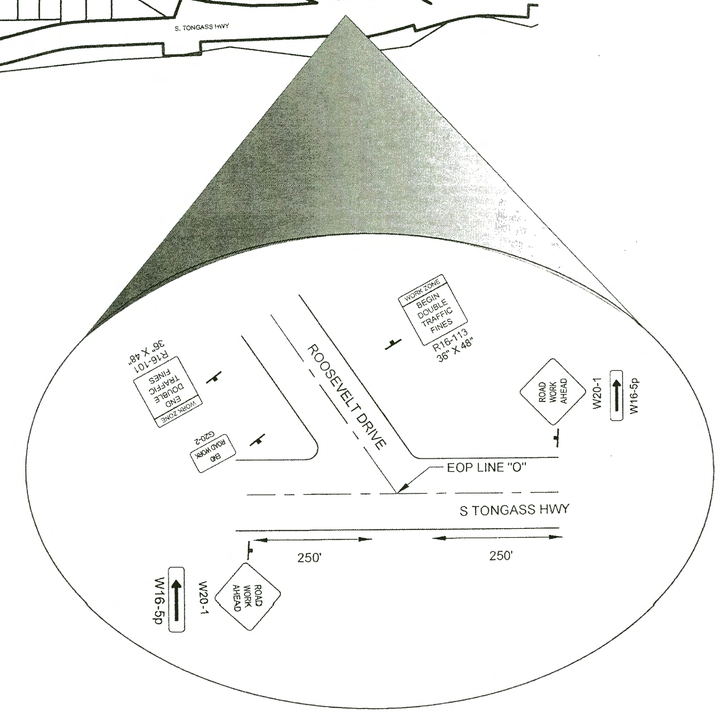

ADD W20-102 PLATE BELOW EXISTING SPEED LIMIT SIGNS

SEE STD DWG C-04.12 FOR DOUBLE TRAFFIC FINE SIGNS

PERMANENT CONSTRUCTION SIGNING

TCP NOT SEALED IN ACCORDANCE WITH ALASKA HIGHWAY PRECONSTRUCTION MANUAL SECTION 1400.3.5 DATED JANUARY 30, 2012

STATE OF ALASKA, DEPARTMENT OF TRANSPORTATION AND PUBLIC FACILITIES
6860 GLACIER HIGHWAY, JUNEAU, AK 99811
(907)465-1763

KTN ROOSEVELT DRIVE & FRANKLIN ROAD PAVEMENT REHABILITATION

TRAFFIC CONTROL

DATE	LAYOUT	DESIGNED	CHECKED	DRAFTED
3/3/2017 15:42	T2	DD	JB, LC	DD, JT

FILE Q:\Ktn\68663\EN\Dwgs\Sheets\68663_T2_TRAFFIC.dwg

HMF 3-18-20

C-04.12

SHEET 1 of 1

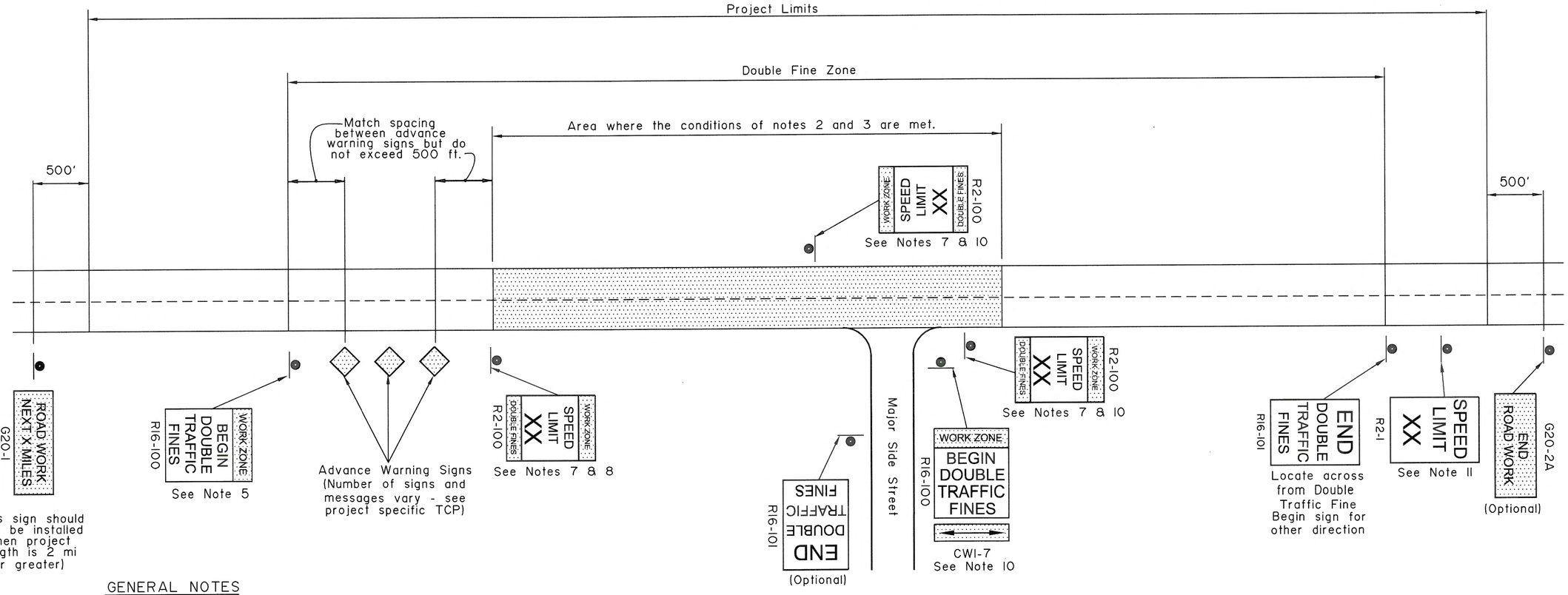

GENERAL NOTES

1. Signs are shown for one direction only (with one exception). Signs for the other direction mirror those shown.

2. Double fine signs shall be used only where one or more of the following conditions exist:
   a. Active work areas (where road workers and/or machines are presently working on or adjacent to a road)
   b. Detours on new temporary roads built for that purpose (this does not include detours on existing streets)
   c. Sections of paved roads where pavement has been removed.
   d. Roads being paved where unmatched asphalt lifts result in a vertical lip between lanes.

3. Double fine signs shall be confined to the areas where the above conditions exist, with the following exceptions:
   a. If the project is 2 miles or shorter in length, the entire project may be posted for double fines when the above conditions exist on any part of the project.
   b. When the above conditions exist at multiple locations separated by less than 2 miles, the locations and the intervening segments may be posted as a single double fine zone.

4. Double fine signs shall be removed or covered when work activity ceases for more than two days and conditions b, c, or d of note 2 are not met.

5. The R16-100 "BEGIN" sign may be used in place of the first advance warning sign. However, when this is done, the appropriate advance warning sign must be reinstalled when the double fine sign is taken down or covered.

6. When a double fine zone is longer than 2 miles, work zone speed limit signs shall be posted at spacings not greater than 2 miles within the double fine zone.

7. "Work zone speed limit signs", as used here, refer either to 1) R2-100 signs or 2) standard R2-1 regulatory speed limit signs with CW20-102 "DOUBLE FINES" plates mounted below.

8. The limit shown on work zone speed limit signs shall be either the existing limit before construction or, if a work zone speed limit order has been approved in accordance with ADOT&PF Procedure 05.05.020 PDR, a reduced limit.

9. All existing regulatory speed limit signs within double fine zones shall either be replaced with R2-100 signs or supplemented with CW20-102 plates.

10. Signs shall be installed at major intersections within the double fine zone to warn entering drivers of double fines. This may be done with a R16-100 sign with a CWI-7 arrow panel on the side street or with two work zone speed limit signs on the main street on either side of the intersection. Use of R16-100 signs on side streets eliminates the need for "Road Work Ahead" signs on those streets. If the speed limit has been reduced, the two work zone speed limit signs are mandatory.

11. At the end of each double fine zone, install an R2-1 sign showing the speed limit for the road beyond the double fine zone.

REVISIONS		
Date	Description	By
6/11/99	Revised Notes	KJS
2/28/03	Rev. Notes & Sign No's	KJS

State of Alaska
Department of Transportation
& Public Facilities

LOCATION OF DOUBLE TRAFFIC FINE SIGNS

APPROVED

Date 3/31/99

C-04.12

HME 3.18.20

D-01.02

SHEET 1 of 1

GENERAL NOTES:

1. Sidefill shall be placed and compacted with care under haunches of pipe and shall be brought up evenly and simultaneously on both sides of pipe to 1 foot above the top of the full length of the pipe.
2. Alternate installation methods may only be used when specified or approved by the Engineer.

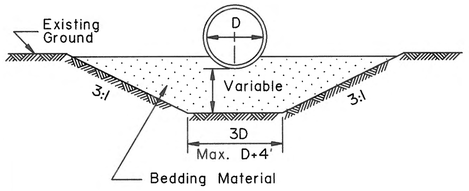

TYPE "A"
FOUNDATION STABILIZATION

To be used in unstable areas as directed by the Engineer.

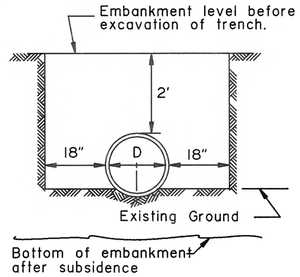

TYPE "B"

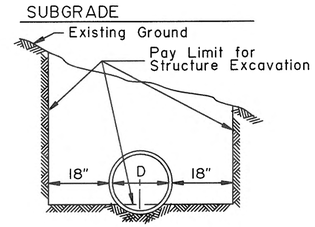

TYPE "C"

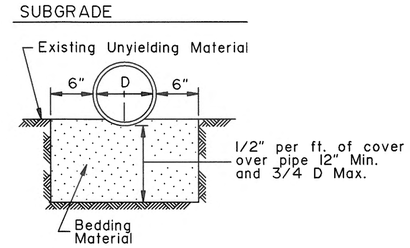

TYPE "D"
ROCK OR UNYIELDING MATERIAL

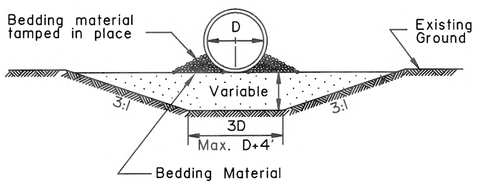

'ALTERNATE'
TYPE "A"
FOUNDATION STABILIZATION

To be used in unstable areas as directed by the Engineer.

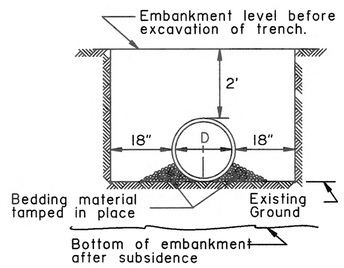

'ALTERNATE'
TYPE "B"

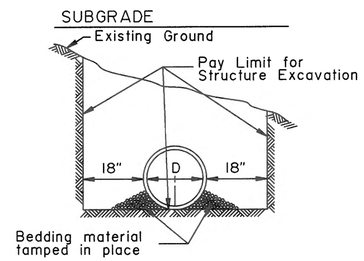

'ALTERNATE'
TYPE "C"

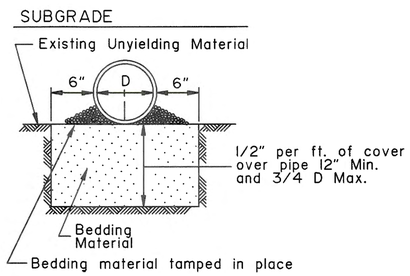

'ALTERNATE' TYPE "D"
ROCK OR UNYIELDING MATERIAL

D = Nominal Pipe Diameter

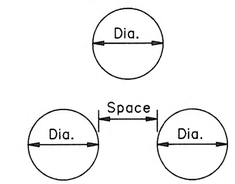

MULTIPLE INSTALLATIONS	
Dia.	Minimum Space Between Pipes
0" - 42"	24"
48" & Over	1/2 Dia. of pipe or 3', whichever is less.

S = Nominal Pipe Arch Span

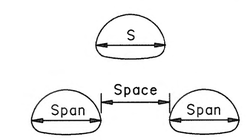

MULTIPLE INSTALLATIONS	
Dia.	Minimum Space Between Pipes
0" - 42"	24"
48" & Over	1/2 Span of pipe arch or 3', whichever is less.

CULVERT PIPE

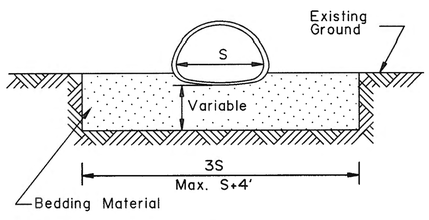

TYPE "A"
FOUNDATION STABILIZATION

To be used in unstable areas as directed by the Engineer.

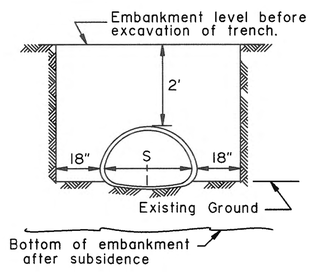

TYPE "B"

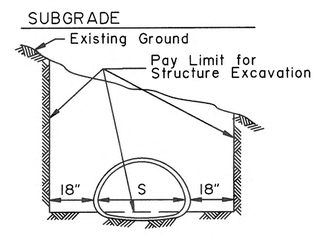

TYPE "C"

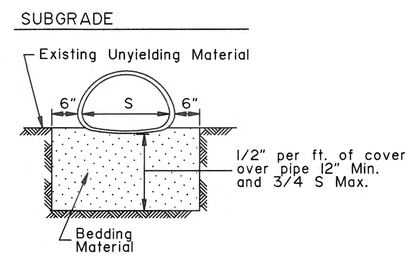

TYPE "D"
ROCK OR UNYIELDING MATERIAL

ARCH

REVISIONS		
Date	Description	By
12/1/87	Delete ref. to Specs.	Gdo
4/1/93	Delete Alt. Arch	Gdo

State of Alaska
Department of Transportation
& Public Facilities

CULVERT PIPE & ARCH INSTALLATION DETAILS

APPROVED

State of Alaska 49TH Loren L. Rasmussen CE-3395

Date 7/15/82

D-01.02

HMF 318.20

D-04.21

CORRUGATED CIRCULAR ALUMINUM PIPE

Minimum & Maximum Cover For 2 2/3" x 1/2" Aluminum Pipe

GAGE	0.060"		0.075"		0.105"		0.135"		0.164"	
Dia. (In)	Min. (In)	Max. (Ft)	Min. (In)	Max. (Ft)	Min. (In)	Max. (Ft)	Min. (In)	Max. (Ft)	Min. (In)	Max. (Ft)
12	12	100+	12	100+	12	100+	12	100+	12	100+
15	12	94	12	100+	12	100+	12	100+	12	100+
18	12	75	12	94	12	100+	12	100+	12	100+
21	12	65	12	82	12	100+	12	100+	12	100+
24	12	56	12	71	12	99	12	100+	12	100+
27	12	48	12	63	12	89	12	100+	12	100+
30			12	56	12	79	12	100+	12	100+
36			12	47	12	66	12	85	12	100+
42			12	55	12	56	12	73	12	100+
48			12	47	12	49	12	63	12	78
54					15	43	15	56	15	69
60							15	50	15	62
66							18	44	18	56
72									18	45

Minimum & Maximum Cover For 3" x 1" Aluminum Pipe

GAGE	0.060"		0.075"		0.105"		0.135"		0.164"	
Dia. (In)	Min. (In)	Max. (Ft)	Min. (In)	Max. (Ft)	Min. (In)	Max. (Ft)	Min. (In)	Max. (Ft)	Min. (In)	Max. (Ft)
30	12	52	12	65						
36	12	43	12	54	12	100+	12	100+	12	100+
42	12	36	12	46	12	65	12	100+	12	100+
48	12	32	12	40	12	57	12	73	12	100+
54	15	28	15	35	15	50	12	65	12	100+
60	15	25	15	32	15	45	15	58	15	72
66	18	23	18	28	18	41	18	53	18	65
72	18	21	18	26	18	37	18	48	18	59
78			21	24	21	34	21	44	21	55
84					21	31	21	41	21	57
90					24	29	24	38	21	47
96					24	27	24	36	24	44
102							24	33	24	41
108							24	31	24	39
114									24	37
120									24	35

Minimum & Maximum Cover For 9" x 2 1/2" Aluminum Structural Plate Pipe *

GAGE	0.100"		0.125"		0.150"		0.175"		0.200"		0.225"		0.250"	
Dia. (In)	Min. (In)	Max. (Ft)	Min. (In)	Max. (Ft)	Min. (In)	Max. (Ft)	Min. (In)	Max. (Ft)	Min. (In)	Max. (Ft)	Min. (In)	Max. (Ft)	Min. (In)	Max. (Ft)
60	12	29 31	12	38 45	12	49 60	12	58 70	12	58 81	12	58 92	12	58 100+
66	12	26 28	12	35 41	12	44 54	12	53 64	12	53 74	12	53 84	12	53 94
72	13	24 25	12	32 37	12	41 50	12	48 58	12	48 67	12	48 77	12	48 86
78	14	22 23	12	29 35	12	37 46	12	45 54	12	45 62	12	45 71	12	45 79
84	15	20 22	13	27 32	12	35 42	12	41 50	12	41 58	12	41 66	12	41 73
90	16	19 20	14	25 30	13	32 40	12	39 47	12	39 54	12	39 61	12	39 68
96	17	18 19	15	24 28	14	30 37	13	36 44	12	36 50	12	36 57	12	36 64
102	18	17 18	16	22 26	15	29 35	14	34 41	13	34 47	13	34 54	13	34 60
108	19	16 17	17	21 25	16	27 33	14	32 39	14	32 45	14	32 51	14	32 57
114	20	15 16	18	20 23	16	25 31	15	30 37	15	30 42	15	30 48	15	30 54
120	21	14 15	19	19 22	17	24 30	16	29 35	15	29 40	15	29 46	15	29 51
126	22	13 14	20	18 21	18	23 28	17	27 33	16	27 38	16	27 44	16	27 49
132	23	13 14	21	17 20	19	22 27	18	26 32	17	26 37	17	26 42	17	26 47
138	24	12 13	22	16 19	20	21 26	18	25 30	18	25 35	18	25 40	18	25 44
144	25	12 12	22	16 18	21	20 25	19	24 29	18	24 33	18	24 38	18	24 43
150			23	15 18	21	19 24	20	23 28	19	23 32	19	23 36	19	23 41
156			24	14 17	22	18 23	21	22 27	20	22 31	20	22 35	20	22 39
162					23	18 22	21	21 26	21	21 30	21	21 34	21	21 38
168					24	17 21	22	20 25	21	20 29	21	20 33	21	20 36
174					25	17 20	23	20 24	22	20 28	22	20 31	22	20 35
180							24	19 23	23	19 27	23	19 30	23	19 34

*Longitudinal seams use (5 1/3) 3/4" dia. bolts per foot.

58 ← Upper figure for pipe with aluminum bolts.
100+ ← Lower figure for pipe with galvanized steel bolts.
(FOR TABLE ABOVE ONLY.)

CORRUGATED ALUMINUM PIPE-ARCH

Minimum & Maximum Cover For 2 2/3" x 1/2" Aluminum Pipe-Arch

Span x Rise (In. x In.)	Corner Radius (In)	Minimum Gage (In)	Min. Cover (In)	Max. Cover (Ft) 2 Tons Corner Bearing Pressure	Max. Cover (Ft) 3 Tons Corner Bearing Pressure ⓓ
17 x 13	3	0.060	12	13	20
21 x 15	3	0.060	12	12	19
24 x 18	3	0.060	12	11	16
28 x 20	3	0.075	12	10	16
35 x 24	3	0.075	12	9	14
42 x 29	3 1/2	0.105	12	7	13
49 x 33	4	0.105	15	6	12
57 x 38	5	0.135	15	6	12
64 x 43	6	0.135	18	6	12
71 x 47	7	0.164	18	6	12

Minimum & Maximum Cover For 3" x 1" Aluminum Pipe-Arch

Span x Rise (In. x In.)	Corner Radius (In)	Minimum Gage (In)	Min. Cover (In)	Max. Cover (Ft) 2 Tons Corner Bearing Pressure	Max. Cover (Ft) 3 Tons Corner Bearing Pressure ⓓ
40 x 31	5	0.075	30	8	12
46 x 36	6	0.075	24	8	13
53 x 41	7	0.075	24	8	13
60 x 46	8	0.075	24	13	20
66 x 51	9	0.075	18	13	20
73 x 55	12	0.075	18	16	24
81 x 59	14	0.105	18	14	22
87 x 63	14	0.105	18	13	20
95 x 67	16	0.105	18	12	18
103 x 71	16	0.135	24	11	17
112 x 75	18	0.164	24	10	16
117 x 79	18	0.164	24	10	15

Minimum & Maximum Cover For 9" x 2 1/2" Aluminum Structural Plate Pipe-Arch*

Span x Rise (Ft-In x Ft-In)	Corner Radius (In)	Minimum Gage (In)	Min. Cover (ft)	Max. Cover in Feet For Soil Bearing Capacity of: 2 Tons/ft²	3 Tons/ft²
5 - 11 x 5 - 5	31.8	0.100	2	24**	24**
6 - 11 x 5 - 9	31.8	0.100	2	22**	22**
7 - 3 x 5 - 11	31.8	0.100	2	20**	20**
7 - 9 x 6 - 0	31.8	0.100	2	28**	18 **
8 - 5 x 6 - 3	31.8	0.100	2	17 **	17 **
9 - 3 x 6 - 5	31.8	0.100	2	15 **	15 **
10 - 3 x 6 - 9	31.8	0.100	2	14 **	14 **
10 - 9 x 6 - 10	31.8	0.100	2	13 **	13 **
11 - 5 x 7 - 1	31.8	0.100	2	12 **	12 **
12 - 7 x 7 - 5	31.8	0.125	2	14	16 **
12 - 11 x 7 - 6	31.8	0.150	2	13	14 **
13 - 1 x 8 - 2	31.8	0.150	2	13	18 **
13 - 11 x 8 - 5	31.8	0.150	2	12	17 **
14 - 8 x 9 - 8	31.8	0.175	2	12	18
15 - 4 x 10 - 0	31.8	0.175	2	11	17
16 - 1 x 10 - 4	31.8	0.200	2	10	16
16 - 9 x 10 - 8	31.8	0.200	2.17	10	15
17 - 3 x 11 - 0	31.8	0.225	2.25	10	15
18 - 0 x 11 - 4	31.8	0.255	2.25	9	14
18 - 8 x 11 - 8	31.8	0.250	2.33	9	14

*Longitudinal seams use (5 1/3) 3/4" dia. bolts per foot.

**Fill limited by the seam strength of the bolts. 3/4" dia. bolts per foot.

METAL THICKNESSES & GAGES

ALUMINUM	GAGE NO. (For Info Only)
0.060	16
0.075	14
0.105	12
0.135	10
0.164	8

ⓓ This column shall not be used unless specified on the plans or approved by the Regional Geotechnical Engineer.

GENERAL NOTES:

1. All material and workmanship shall be in accordance with the State of Alaska, Standard Specifications for Highway Construction.
2. The contractor shall select only pipes that meet specific height of cover criteria shown on the plans or in the special provisions.
3. No more than one type of pipe may be used on any single installation or installation grouping.
4. All structural plate pipes shall be placed on a pre-shaped foundation conforming to the depth of the bottom plates with clearance for assembling to the adjacent plates allowed.
5. See Standard Drawing "Culvert Pipe & Arch Installation Details" for foundation and structural backfill details.
6. Minimum cover shall be measured from the top of pipe to the top of rigid pavement or to the top of flexible pavement subgrade. In all cases, the minimum cover shall not be less than 12". Minimum cover during construction shall be that required to protect the pipe from damage or deflecton.
7. These tables have been developed for an H-20 live load and for compacted soil weighing 120 lbs. per cubic foot or less. If compacted soil cover exceeds 120 lbs. per cubic foot, the contractor shall use the depth of cover shown in the plans for the specific pipe. Where compacted soil cover exceeds 120 lbs. per cubic foot and no specific cover requirements are provided in the plans, the contractor shall determine the required minimum pipe cover in accordance with Section 12 of the 2000 AASHTO "LRFD Bridge Design Specifications".

REVISIONS

Date	Description	By
8/10/00	Pipe Tables & G. Notes.	DFD
10/31/03	Pipe Table Updates & New Sheet 4	LRG

Sheet 1 of 4

State of Alaska
Department of Transportation
& Public Facilities

PIPE AND ARCH TABLES

APPROVED
STATE OF ALASKA 49TH
Lars R. Gregovich
CE-8065
REGISTERED PROFESSIONAL ENGINEER
Date 10/31/03

D-04.21

HMF 3/8/20

D-04.21

CORRUGATED CIRCULAR STEEL PIPE

Minimum & Maximum Cover For 2 2/3" x 1/2" Steel Pipe

GAGE	0.064"		0.079"		0.109"		0.138"		0.168"	
Dia. (In)	Min. (In)	Max. (Ft)	Min. (In)	Max. (Ft)	Min. (In)	Max. (Ft)	Min. (In)	Max. (Ft)	Min. (In)	Max. (Ft)
12	12	100+	12	100+	12	100+	12	100+	12	100+
15	12	100+	12	100+	12	100+	12	100+	12	100+
18	12	100+	12	100+	12	100+	12	100+	12	100+
21	12	100+	12	100+	12	100+	12	100+	12	100+
24	12	100+	12	100+	12	100+	12	100+	12	100+
27	12	100+	12	100+	12	100+	12	100+	12	100+
30	12	99	12	100+	12	100+	12	100+	12	100+
36	12	83	12	100+	12	100+	12	100+	12	100+
42	12	71	12	88	12	100+	12	100+	12	100+
48	12	62	12	77	12	100+	12	100+	12	100+
54			12	66	12	93	12	100+	12	100+
60					12	79	12	100+	12	100+
66					12	68	12	88	12	100+
72							12	75	12	93
78									12	79
84									12	66

Minimum & Maximum Cover For 3" x 1" Steel Pipe

GAGE	0.064"		0.079"		0.109"		0.138"		0.168"	
Dia. (In)	Min. (In)	Max. (Ft)	Min. (In)	Max. (Ft)	Min. (In)	Max. (Ft)	Min. (In)	Max. (Ft)	Min. (In)	Max. (Ft)
36	12		12		12	100+	12	100+	12	100+
42	12		12		12	100+	12	100+	12	100+
48	12		12	76	12	100+	12	100+	12	100+
54	12	63	12	79	12	100+	12	100+	12	100+
60	12	56	12	71	12	99	12	100+	12	100+
66	12	52	12	64	12	90	12	100+	12	100+
72	12	47	12	59	12	82	12	100+	12	100+
78	12	44	12	54	12	77	12	98	12	100+
84	12	41	12	51	12	71	12	92	12	100+
90	12	37	12	47	12	67	12	86	12	100+
96	12	35	12	44	12	62	12	80	12	98
102	18	33	18	42	18	59	18	76	18	93
108			18	40	18	55	18	71	18	87
114			18	36	18	51	18	66	18	80
120			18	34	18	46	18	61	18	75
126					18	44	18	56	18	70
132					18	41	18	53	18	64
138					18	37	18	49	18	60
144							18	44	18	55
150									18	52

Minimum & Maximum Cover For 5" x 1" Steel Pipe*

GAGE	0.064"		0.079"		0.109"		0.138"		0.168"	
Dia. (In)	Min. (In)	Max. (Ft)	Min. (In)	Max. (Ft)	Min. (In)	Max. (Ft)	Min. (In)	Max. (Ft)	Min. (In)	Max. (Ft)
36	12	81	12	90	12	100+	12	100+	12	100+
42	12	71	12	77	12	100+	12	100+	12	100+
48	12	62	12	68	12	100+	12	100+	12	100+
54	12	56	12	70	12	98	12	100+	12	100+
60	12	50	12	63	12	88	12	100+	12	100+
66	12	46	12	57	12	80	12	100+	12	100+
72	12	42	12	52	12	73	12	95	12	100+
78	12	39	12	48	12	68	12	87	12	100+
84	12	36	12	45	12	63	12	81	12	99
90	12	33	12	42	12	59	12	76	12	93
96	12	31	12	39	12	55	12	71	12	87
102	18	29	18	37	18	52	18	67	18	82
108			18	35	18	49	18	63	18	77
114			18	32	18	45	18	58	18	71
120			18	30	18	41	18	54	18	66
126					18	39	18	50	18	62
132					18	36	18	47	18	57
138					18	33	18	43	18	53
144							18	39	18	49
150									19	47

*Table for pipe with helical lockseams or helical welded seams ONLY.

Minimum & Maximum Cover For 6" x 2" Steel Structural Plate Pipe**

GAGE	ALL	0.111"	0.140"	0.170"	0.188"	0.218"	0.249"	0.280"
Dia. (In)	Min. (In)	Max. (Ft)	Max. (Ft)	Max. (Ft)	Max. (Ft)	Max. (Ft)	Max. (Ft)	Max. (Ft)
60	12	46	68	90	100+	100+	100+	100+
66	12	42	62	81	93	100+	100+	100+
72	12	38	57	75	86	100+	100+	100+
78	12	35	52	69	79	95	100+	100+
84	12	33	49	64	73	88	100+	100+
90	12	31	45	60	68	82	97	100+
96	12	29	43	56	64	77	91	100+
102	18	27	40	52	60	73	86	94
108	18	25	38	50	57	69	81	88
114	18	24	36	47	54	65	77	84
120	18	23	34	45	51	62	73	80
126	18	22	32	42	49	59	69	76
132	18	21	31	40	46	56	66	72
138	18	20	29	39	44	54	63	69
144	18	19	28	37	43	51	61	66
150	24	18	27	36	41	49	58	64
156	24	17	26	34	39	47	56	61
162	24	17	25	33	38	46	54	59
168	24	16	24	32	36	44	52	57
174	24	16	23	31	35	42	50	55
180	24	15	22	30	34	41	48	53
186	24	15	22	29	33	40	47	51
192	24		21	28	32	38	45	50
198	30		20	27	31	37	44	48
204	30		20	26	30	36	43	47
210	30		19	25	29	35	41	45
216	30			25	28	34	40	44
222	30			24	27	33	39	43
228	30			23	27	32	38	42
234	30			23	26	31	37	41
240	30				25	31	36	40
246	36				25	30	35	39
252	36					29	34	38
258	36					28	34	37
264	36					28	33	36
270	36					27	32	35
276	36						31	34
282	36						31	34
288	42						30	33
294	42							32
300	42							32
306	42							31
312	42							30

**Longitudinal seams use (4) 3/4" dia. bolts per foot.

GENERAL NOTES

1. All material and workmanship shall be in accordance with the State of Alaska, Standard Specifications for Highway Construction.
2. The contractor shall select only pipes that meet specific height of cover criteria shown on the plans or in the special provisions.
3. No more than one type of pipe may be used on any single installation or installation grouping.
4. All structural plate pipes shall be placed on a pre-shaped foundation conforming to the depth of the bottom plates with clearance for assembling to the adjacent plates allowed.
5. See Standard Drawing "Culvert Pipe & Arch Installation Details" for foundation and structural backfill details.
6. Minimum cover shall be measured from the top of pipe to the top of rigid pavement or to the top of flexible pavement subgrade. In all cases, the minimum cover shall not be less than 12". Minimum cover during construction shall be that required to protect the pipe from damage or deflecton.
7. These tables have been developed for an H-20 live load and for compacted soil weighing 120 lbs. per cubic foot or less. If compacted soil cover exceeds 120 lbs. per cubic foot, the contractor shall use the depth of cover shown in the plans for the specific pipe. Where compacted soil cover exceeds 120 lbs. per cubic foot and no specific cover requirements are provided in the plans, the contractor shall determine the required minimum pipe cover in accordance with Section 12 of the 2000 AASHTO "LRFD Bridge Design Specifications".

CORRUGATED STEEL PIPE-ARCH

Minimum & Maximum Cover For 2 2/3" x 1/2" Steel Pipe-Arch

Span x Rise (In. x In.)	Corner Radius (In)	Minimum Gage (In)	Min. Cover (In)	Max. Cover (Ft): 2 Tons Corner Bearing Pressure	Max. Cover (Ft): 3 Tons Corner Bearing Pressure ⓐ
17 x 13	3	0.064	12	16	18
21 x 15	3	0.064	12	15	14
24 x 18	3	0.064	12	15	13
28 x 20	3	0.064	12	15	11
35 x 24	3	0.064	12	15	7
42 x 29	3 1/2	0.064	12	15	7
49 x 33	4	0.079	12	15	6
57 x 38	5	0.109	12	15	8
64 x 43	6	0.109	12	15	9
71 x 47	7	0.138	12	15	10
77 x 52	8	0.168	12	15	10
83 x 57	9	0.168	12	15	10

Minimum & Maximum Cover For 3" x 1" Steel Pipe-Arch

Span x Rise (In. x In.)	Corner Radius (In)	Minimum Gage (In)	Min. Cover (In)	Max. Cover (Ft): 2 Tons Corner Bearing Pressure	Max. Cover (Ft): 3 Tons Corner Bearing Pressure ⓐ
40 x 31	5	0.079	12	25	12
46 x 36	6	0.079	12	25	13
53 x 41	7	0.079	12	25	13
60 x 46	8	0.079	15	25	13
66 x 51	9	0.079	15	25	13
73 x 55	12	0.079	18	24	16
81 x 59	14	0.079	18	21	17
87 x 63	14	0.079	18	20	16
95 x 67	16	0.079	18	20	17
103 x 71	16	0.079	18	20	15
112 x 75	18	0.079	21	20	16
117 x 79	18	0.109	21	19	15
128 x 83	18	0.138	24	19	14
137 x 87	18	0.138	24	19	13
142 x 91	18	0.138	24	19	12
150 x 96	18	0.138	30	19	
157 x 96	18	0.138	30	19	
164 x 105	18	0.138	30	19	
171 x 110	18	0.138	30	19	

Minimum & Maximum Cover For 5" x 1" Steel Pipe-Arch

Span x Rise (In. x In.)	Corner Radius (In)	Minimum Gage (In)	Min. Cover (In)	Max. Cover (Ft): 2 Tons Corner Bearing Pressure	Max. Cover (Ft): 3 Tons Corner Bearing Pressure ⓐ
40 x 31	5	0.109	12	25	12
46 x 36	6	0.109	15	25	13
53 x 41	7	0.109	15	25	13
60 x 46	8	0.109	18	25	13
66 x 51	9	0.109	18	25	13
73 x 55	12	0.109	18	24	16
81 x 59	14	0.109	18	21	17
87 x 63	14	0.109	18	20	16
95 x 67	16	0.109	18	20	17
103 x 71	16	0.109	18	20	15
112 x 75	18	0.109	21	20	16
117 x 79	18	0.109	21	19	15
128 x 83	18	0.109	24	19	14
137 x 87	18	0.109	24	19	13
142 x 91	18	0.109	24	19	12
150 x 96	18	0.138	30	19	
157 x 96	18	0.138	30	19	
164 x 105	18	0.138	30	19	
171 x 110	18	0.138	30	19	

Minimum & Maximum Cover For 6" x 2" Steel Structural Plate Pipe-Arch**

Span x Rise (Ft-In x Ft-In)	Corner Radius (In)	Minimum Gage (In)	2 Tons Corner Bearing Pressure: Min. Cover (In)	2 Tons Corner Bearing Pressure: Max. Cover (Ft)	3 Tons Corner Bearing Pressure ⓐ: Min. Cover (In)	3 Tons Corner Bearing Pressure ⓐ: Max. Cover (Ft)
6-1 x 4-7	18	0.111	18	16	12	24
7-0 x 5-1	18	0.111	18	14	12	21
7-11 x 5-7	18	0.111	18	13	12	19
8-10 x 6-1	18	0.111	24	11	18	17
9-9 x 6-7	18	0.111	24	10	18	15
10-11 x 7-1	18	0.111	24	9	18	14
11-10 x 7-7	18	0.111	24	7	18	13
12-10 x 8-4	18	0.111	30	6	24	12
14-1 x 8-9	18	0.111	30	5	24	11
15-4 x 9-3	18	0.111	NS	NS	24	10
15-10 x 9-10	18	0.111	NS	NS	24	9
16-7 x 10-1	18	0.111	NS	NS	24	9
13-3 x 9-4	31	0.111	24	13	24	17
14-2 x 9-10	31	0.111	24	12	24	16
15-4 x 10-4	31	0.111	24	11	24	15
16-3 x 10-10	31	0.111	24	11	24	14
17-2 x 11-4	31	0.111	30	10	30	13
18-1 x 11-10	31	0.111	30	10	30	12
19-3 x 12-4	31	0.111	30	9	30	13
19-11 x 12-10	31	0.140	30	9	30	13
20-7 x 13-2	31	0.140	36	7	36	13

NS = Not Suitable

ⓐ This column shall not be used unless specified on the plans or approved by the Region Geotechnical Engineer.

**Longitudinal seams use (4) 3/4" dia. bolts per foot.

METAL THICKNESSES & GAGES

STEEL: ZINC COATED	STEEL: UNCOATED	GAGE NO. (For Info Only)
0.064	0.0598	16
0.079	0.0747	14
0.109	0.1047	12
0.138	0.1345	10
0.168	0.1644	8
0.188	0.1838	7
0.218	0.2145	5
0.249	0.2451	3
0.280	0.2758	1

REVISIONS

Date	Description	By
8/10/00	Pipe Tables & G. Notes.	DFD
10/31/03	Pipe Table Updates & New Sheet 4.	LRG

Sheet 2 of 4

State of Alaska
Department of Transportation & Public Facilities

PIPE AND ARCH TABLES

APPROVED

STATE OF ALASKA 49TH Lars R. Gregovich CE-8065 PROFESSIONAL ENGINEER

Date 10/31/03

D-04.21

HMF 3.18.20

D-04.21

Maximum Cover for Type S Corrugated Polyethelene Pipe	
Size (in.)	Max. Cover (ft.)
12	30.0
15	30.0
18	30.0
24	30.0
30	30.0
36	30.0
40	20.0
48	20.0

GENERAL NOTES

1. All materials and workmanship shall be in accordance with the State of Alaska Standard Specifications for Highway Construction.

2. For foundation and structural backfill details see Standard Drawing "Culvert Pipe & Arch Installation Details".

3. Pipe cover height is measured from top of the pipe to top of rigid pavement, or to the top of subgrade for flexible pavement. In all cases the minimum cover shall be no less than 2 ft. Where loads traverse the culvert during construction minimum cover shall be no less than 4 ft.

REVISIONS		
Date	Description	By
10/31/03	New Sheet 4.	LRG

Sheet 3 of 4

State of Alaska
Department of Transportation
& Public Facilities

PIPE AND ARCH TABLES

APPROVED

STATE OF ALASKA 49TH Lars R. Gregovich CE-8065 REGISTERED PROFESSIONAL ENGINEER

Date 10/31/03

D-04.20

HMF 3.18.20

D-04.21

ALUMINUM SPIRAL RIB PIPE

Minimum & Maximum Cover For Aluminum Spiral Rib Circular Pipe*								
GAGE	0.060"		0.075"		0.105"		0.135"	
Dia. (In)	Min. (In)	Max. (Ft)	Min. (In)	Max. (Ft)	Min. (In)	Max. (Ft)	Min. (In)	Max. (Ft)
12	24	35	24	50				
18	24	34	24	49				
24	24	25	24	36	24	63	24	82
30	24	19	24	28	24	50	24	65
36	24	15	24	24	24	41	24	54
42			24	19	24	35	24	46
48			24	17	24	30	24	40
54			24	14	24	27	24	35
60			24	12	24	24	24	30

*¾ x ¾ x 7½ in. or ¾ x 1 x 1½ in. Corrugations

Minimum & Maximum Cover For Aluminum Spiral Rib Pipe-Arch*				
		Soil Corner Bearing Capacity of 2 Tons/ s.f.		
		0.060"	0.075"	0.105"
Span x Rise (In. x In.)	Min. Cover (In.)	Max. Cover (ft.)	Max. Cover (ft.)	Max. Cover (ft.)
20 x 16	12	13		
23 x 19	12	14		
27 x 21	12	13		
33 x 26	12	13		
40 x 31	12	13		
46 x 36	12	14		
53 x 41	18		13	
60 x 46	18		20	
66 x 51	18		21	
73 x 55	18			21
81 x 59	18			17
87 x 63	18			17
95 x 67	18			17

*¾ x ¾ x 7½ in. or ¾ x 1 x 1½ in. Corrugations

STEEL SPIRAL RIB PIPE

Minimum & Maximum Cover For Steel and Aluminized Steel Spiral Rib Circular Pipe*								
GAGE	0.064"		0.079"		0.109"		0.138"**	
Dia. (In)	Min. (In)	Max. (Ft)	Min. (In)	Max. (Ft)	Min. (In)	Max. (Ft)	Min. (In)	Max. (Ft)
18	12							
24	12	51	12	72	12	121		
30	12	41	12	58	12	97		
36	12	34	12	48	12	81		
42	12	29	12	41	12	69		
48	12	26	12	36	12	61		
54	18	23	18	32	18	54		
60	18	21	18	29	18	49	18	73
66	18	19	18	26	18	44	18	65
72			18	24	18	40	18	59
78			24	22	24	37	24	55
84			24	21	24	35	24	52
90					24	32	24	47
96					24	30	24	44
102					30	29	30	43
108					30	27	30	41

*¾ x ¾ x 7½ in. or ¾ x 1 x 1½ in. Corrugations
**¾ x ¾ x 7½ in. Corrugations Only.

Minimum & Maximum Cover For Steel Spiral Rib Arch-Pipe*				
		Soil Corner Bearing Capacity of 2 Tons/ s.f.		
		0.064"	0.079"	0.109"
Span x Rise (In. x In.)	Min. Cover (In.)	Max. Cover (ft.)	Max. Cover (ft.)	Max. Cover (ft.)
20 x 16	12	13		
23 x 19	12	14		
27 x 21	12	13		
33 x 26	12	13		
40 x 31	12	13		
46 x 36	12	14		
53 x 41	18		13	
60 x 46	18		20	
66 x 51	18		21	
73 x 55	18			21
81 x 59	18			17
87 x 63	18			17
95 x 67	18			17

*¾ x ¾ x 7½ in. or ¾ x 1 x 1½ in. Corrugations

GENERAL NOTES

1. All material and workmanship shall be in accordance with the State of Alaska, Standard Specifications for Highway Construction.
2. The contractor shall select only pipes that meet specific height of cover criteria shown on the plans or in the special provisions.
3. No more than one type of pipe may be used on any single installation or installation grouping.
4. All structural plate pipes shall be placed on a pre-shaped foundation conforming to the depth of the bottom plates with clearance for assembling to the adjacent plates allowed.
5. See Standard Drawing "Culvert Pipe & Arch Installation Details" for foundation and structural backfill details.
6. Minimum cover shall be measured from the top of pipe to the top of rigid pavement or to the top of flexible pavement subgrade. In all cases, the minimum cover shall not be less than 12". Minimum cover during construction shall be that required to protect the pipe from damage or deflecton.
7. These tables have been developed for an H-20 live load and for compacted soil weighing 120 lbs. per cubic foot or less. If compacted soil cover exceeds 120 lbs. per cubic foot, the contractor shall use the depth of cover shown in the plans for the specific pipe. Where compacted soil cover exceeds 120 lbs. per cubic foot and no specific cover requirements are provided in the plans, the contractor shall determine the required minimum pipe cover in accordance with Section 12 of the 2000 AASHTO "LRFD Bridge Design Specifications".

REVISIONS

Date	Description	By
8/10/00	Pipe Tables & G. Notes.	DFD
10/31/03	New Sheet 4.	LRG

Sheet 4 of 4

State of Alaska
Department of Transportation
& Public Facilities

PIPE AND ARCH TABLES

APPROVED

STATE OF ALASKA 49TH Lars R. Grigcovich CE-8065 PROFESSIONAL ENGINEER

Date 10/31/03

D-04.21

HMF 3/18/20

D-20.03

SHEET 1 of 1

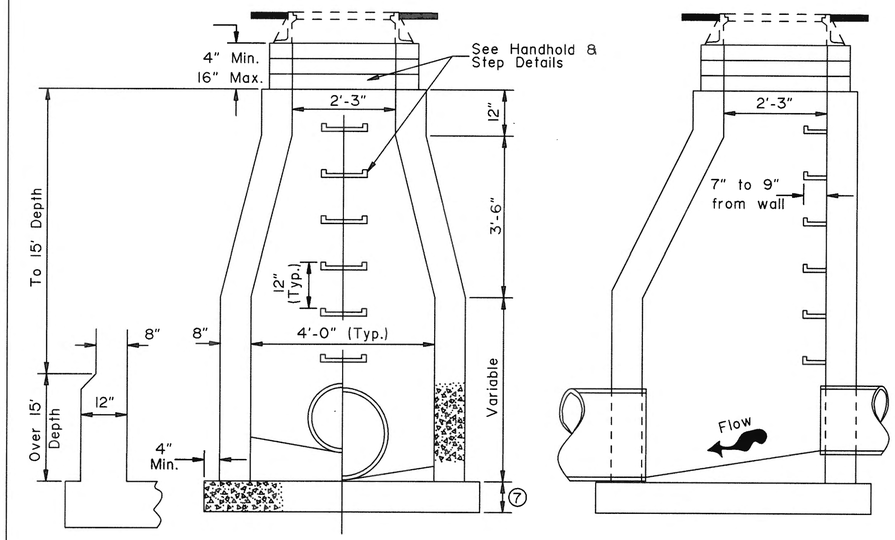

CAST IN PLACE MANHOLE

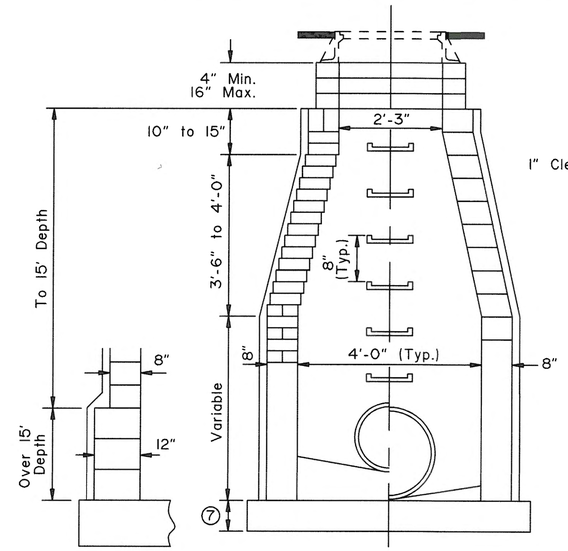

BRICK OR BLOCK MANHOLE

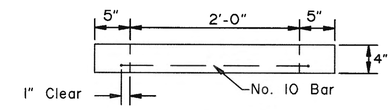

GRADE RING

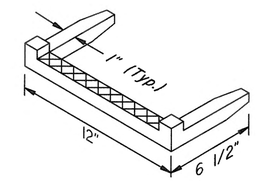

HANDHOLD DETAIL

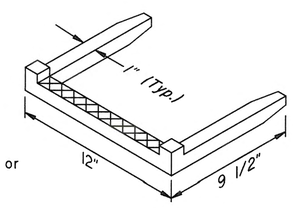

STEP DETAIL

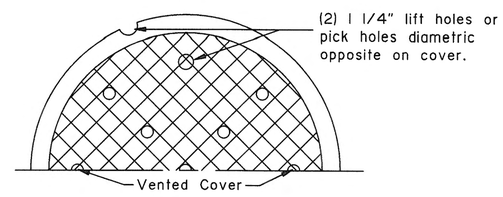

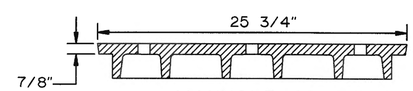

MANHOLE COVER

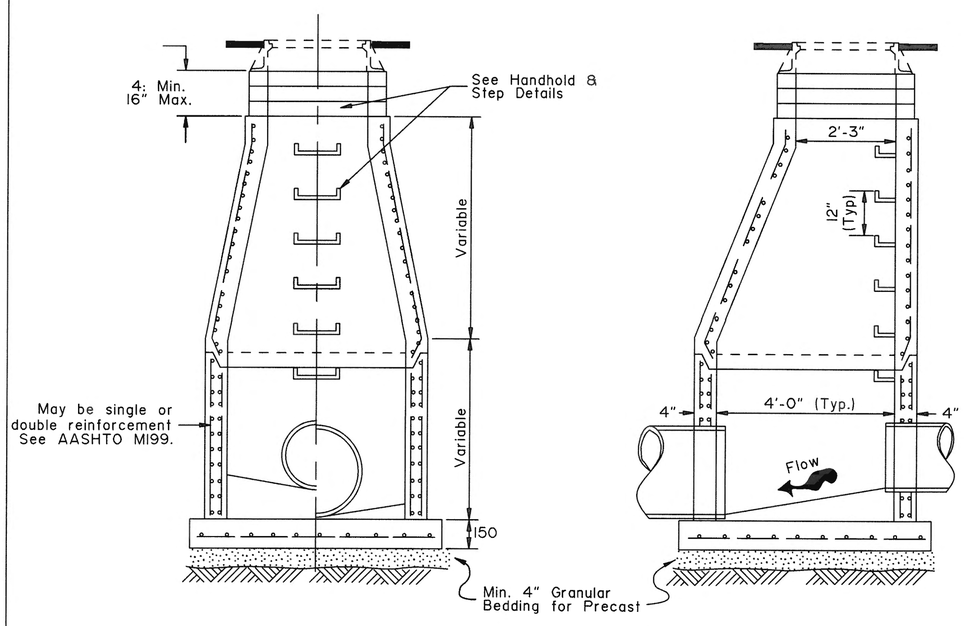

PRECAST CONCRETE MANHOLE

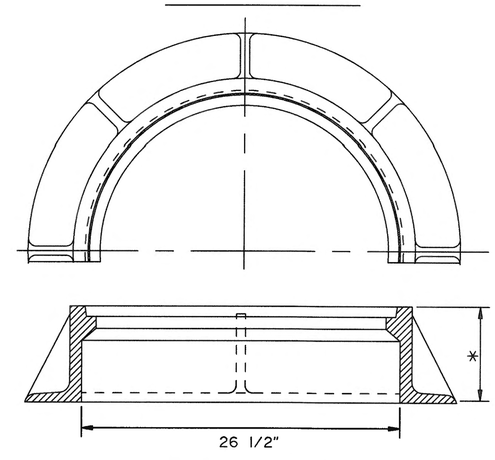

MANHOLE FRAME

MANHOLE FRAME & COVER MINIMUM WEIGHT		
Depth *	5"	350 lbs
	6"	380 lbs
	7"	400 lbs
	8"	440 lbs
	9"	470 lbs
	10"	500 lbs

GENERAL NOTES:

1. Manhole depth shall be as shown on the plans or as directed by the Engineer.
2. Cast in place concrete shall be class W.
3. Manhole frame and cover bearing surface shall be machine finished and all covers interchangeable. Details shown are to indicate general design and may vary among manufacturers.
4. Precast Reinforced Bases may be used in lieu of cast in place bases.
5. Manhole frame shall have a depth of 6" unless specified otherwise on the plans.
6. Precast bases shall have No. 4 reinforcing bar on 12" centers each way for depths under 20' and No. 5 reinforcing bar on 6" centers for depths of 20' and over.
7. Poured in place concrete bases shall be 8" thick for depths less than 15' and 12" thick for depths 15' or greater.

REVISIONS		
Date	Description	By
9/15/91	Added Grade Rings	Gdo
3/15/99	Remove Steps in Rings	EMR

State of Alaska
Department of Transportation
& Public Facilities

MANHOLES, FRAME AND COVER

APPROVED

Date 7/15/82

D-20.03

HWF 3/18/20

D-22.01

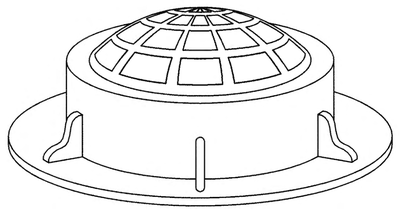

Surround field inlets with a 24" wide rock rubble collar 10" deep, 3" maximum size rock.

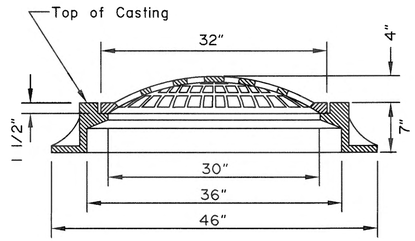

FIELD INLET FRAME & GRATE

To be supplied for storm drain manholes where field inlets are specified. Field inlet frame and grate shall have a Minimum total weight of 525 lb.

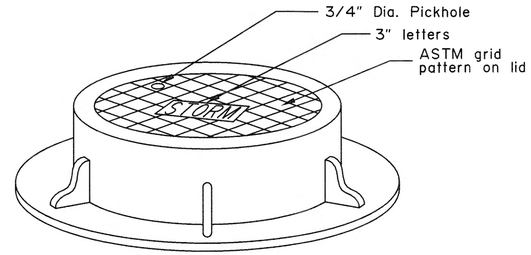

MANHOLE LID FRAME AND GRATE

NOTES:

1. Details shown are to indicate general design only. Dimensions and design may vary among the manufacturers, except that inlet grate shall be within ¼"± of dimensions shown on this drawing.
2. Manhole lids shall be 32" in diameter and may be used with field inlet frames.
3. Type A field inlet frame inside dimensions shall be 24" x 36". Lugs will not protrude outside the concrete surface of the inlet box.
4. Grates shall be bicycle safe. Where high capacity grates are called for on the plans, they shall conform to Std. Dwg. D-25.
5. Frame and grate casting types are identified by the following abbreviations:
   C.I. = Curb Inlet
   F.I. = Field Inlet
   M.H. = Manhole
6. Flowline depression shall conform to Std. Dwg. D-23 for an on grade or sag point conditions.
7. These are the default frames and grates to be used unless shown otherwise on the drainage plans or drainage structure summary.

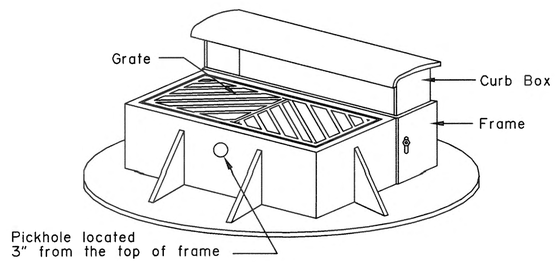

NOTE:
Curb Box, Grate and frame shall have a minimum total weight of 725 lb.

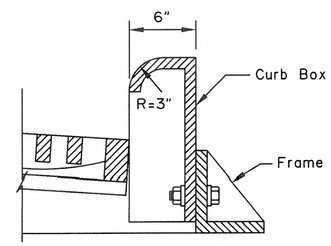

SIDE VIEW
MOUNTABLE CURB AND GUTTER

REQUIRED FRAME AND GRATES (See Note 7)			
STRUCTURE	INLET TYPE	CURB TYPE	TYPE FRAME AND GRATE
INLET BOX, TYPE A	Curb	Mountable	Standard Curb Inlet
	Curb	Expressway	Mountable Curb Inlet
	Curb	Rolled Curb	Depressed Inlet
	Field	------	Field Inlet
STORM DRAIN MANHOLES, TYPE I, II AND III	Curb	Mountable	Mountable Curb Inlet
	Curb	Expressway	Expressway Curb Inlet
	Curb	Rolled Curb	Depressed Inlet
	Field	------	Field Inlet
	Manhole Lids	------	Field Inlet Frame, Solid MH. Lid

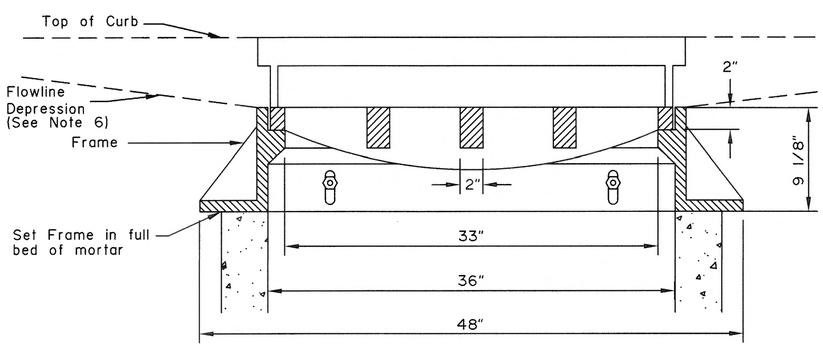

FRONT VIEW

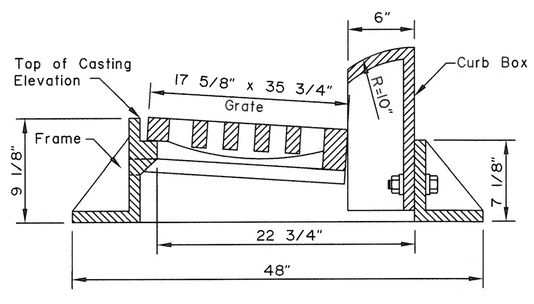

SIDE VIEW
EXPRESSWAY CURB AND GUTTER

CURB INLET FRAME AND GRATE

To be supplied for storm drain manholes Type I, Type II and Type III where curb inlets are specified.

NOT TO SCALE

REVISIONS		
Date	Description	By
10/31/03	Misc. Revisions/ Corrections	LRG

Sheet 1 of 1

State of Alaska
Department of Transportation
& Public Facilities

STORMDRAIN MANHOLE FRAME AND GRATE DETAILS

APPROVED

Date 10/31/03

D-22.01

AMF 3-18-20

D-35.00

SHEET 1 of 1

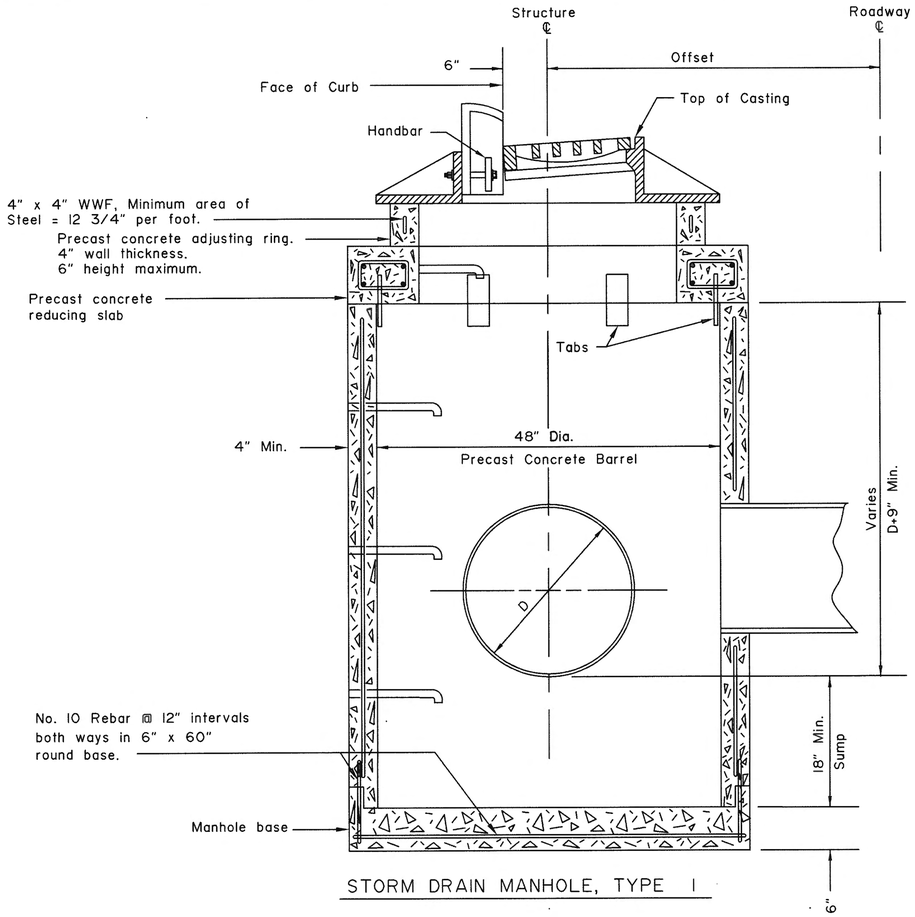

STORM DRAIN MANHOLE, TYPE 1

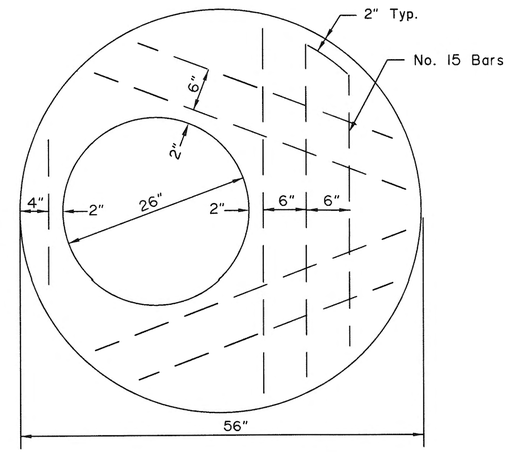

PRECAST CONCRETE REDUCING SLAB

56" to 26" with offset hole.

NOTE: Tabs will be 1/2" x 3" x 7" galvanized steel plates. evenly space 8 tabs around each slab. Insert tabs 4" into concrete, 5 1/2" from outside edge of slab.

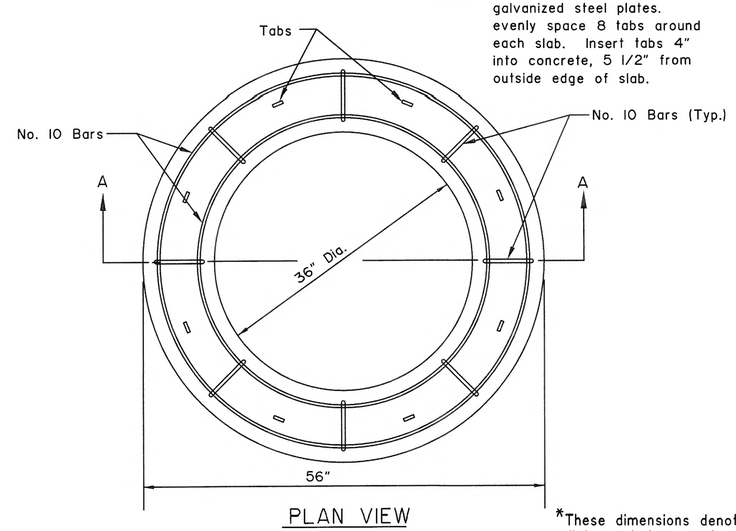

PLAN VIEW

*These dimensions denote distance between edge of concrete and outside edge of resteel.

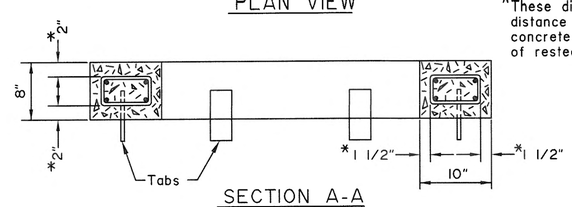

SECTION A-A

PRECAST CONCRETE REDUCING SLAB

56" to 36" with centered hole.

GENERAL NOTES:

1. All drainage structures and appurtenances shall meet the requirements of ASTM C-478.
2. Minimum steel required for barrel as per ASTM-478 shall be imbedded in base so that the first barrel section is connected to the base by continuous steel.
3. Cast-In-Place structures may be used if approved by the Engineer.
4. All blockouts shall be formed.
5. All storm drain manholes and inlets shall have 18" minimum sumps. Manholes with petroleum separators shall have 24" minimum sumps.
6. Steps shall be placed 12" O.C. on the unobstructed side of the structure, 20" from top of casting and 18" maximum from manhole base.
7. On storm drain manhole, type 1 structures, primary pipes not to exceed 30" C.M.P. or 27" rigid concrete pipe with included angle between pipes no less than 135 degrees or primary pipes not to exceed 24" C.M.P. or 21" rigid concrete pipe with included angle no less than 135 degrees.
8. Offsets are measured from ℄ of the road to ℄ of the structure.
9. The precast concrete reducing slab with a 26" opening is to be used with the depressed inlet frame in the rolled curb areas.

REVISIONS		
Date	Description	By

State of Alaska
Department of Transportation
& Public Facilities

48" STORM DRAIN MANHOLE

APPROVED

Date 3/15/99

D-35.00

HMF 3/18/20

G-00.02

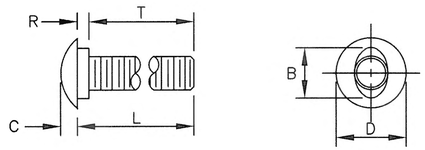

B	C	D	L (Length)	R	T (Thread Length)
15/16"	5/16"	1 5/16" or 1 7/16"	As Required	7/32"	As Required

5/8" BUTTONHEAD BOLT

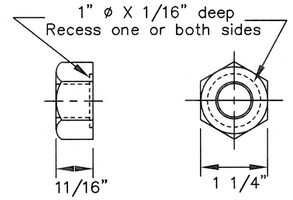

5/8" Dia. RECESSED HEX NUT

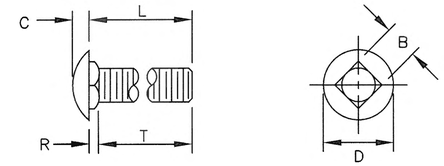

B	C	D	L (Length)	R	T (Thread Length)
5/8"	5/16"	1 5/16"	As Required	3/16"	As Required

5/8" Dia. CARRIAGE BOLT

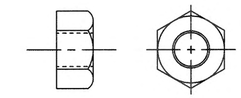

STANDARD HEX NUT

GENERAL NOTES:

1. All covered hardware shall comply with the AASHTO/AGC/ARTBA "A Guide to Standardized Highway Barrier Hardware", latest edition.

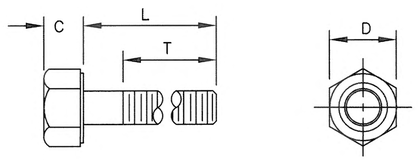

Bolt Size	C	D	L (Length)	T (Thread Length)
5/16"	——	——	1 1/2"	7/8"
5/16"	——	——	1"	1"
3/8"	——	——	7 1/2"	1 1/2"
1/2"	——	——	1 1/2"	1 1/2"
1/2"	——	——	1 1/4"	1 1/4"
5/8" H.S.	5/16"	7/8"	8"	1 1/2"
5/8"-11	——	——	1 1/2"	1 1/2"
3/4"	——	——	1 1/2"	1 1/2"
3/4"	——	——	As Required	2"
3/4" H.S.	15/32"	1 1/4"	2"	1 1/2"

STANDARD HEX BOLTS

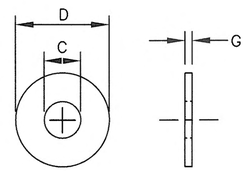

For Bolt ø	C	D	G
3/8"	7/16"	1"	5/64"
1/2"	17/32"	1 1/16"	3/32"
1/2" H.S.	17/32"	1 1/16"	3/32"
5/8"	11/16"	1 3/4"	9/64"
3/4"	13/16"	1 15/32"	9/64"
3/4" H.S.	13/16"	2"	5/32"
1"	1 1/16"	2"	9/64"

STANDARD STEEL WASHERS

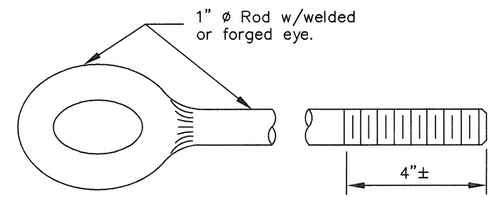

EYE BOLT

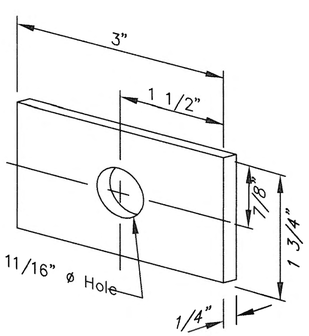

FLAT PLATE WASHER

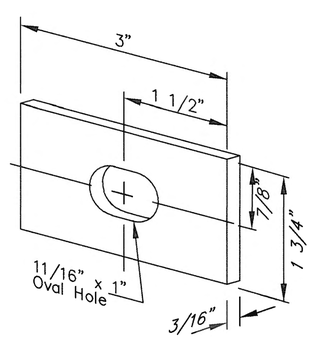

RECTANGULAR POST BOLT WASHER

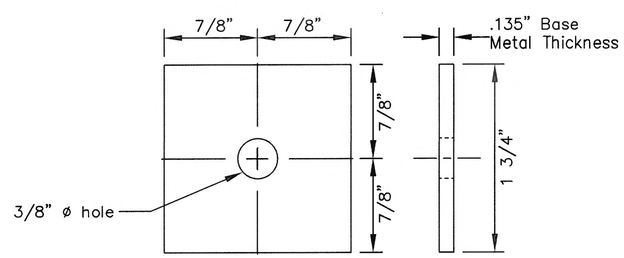

SQUARE STEEL WASHER

REVISIONS

Date	Description	By
3/15/99	Delete BCT Hardware	KJS

State of Alaska
Department of Transportation
& Public Facilities

STANDARD GUARDRAIL HARDWARE
(NUTS, BOLTS, WASHERS)

APPROVED

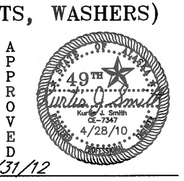

Date 5/31/12

G-00.02

HMF 3.18.20

G-00.02

SHEET 2 of 4

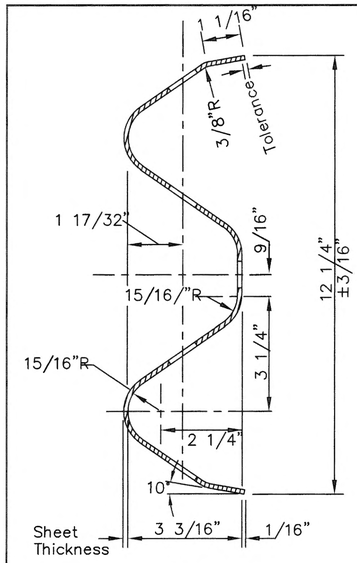

SECTION A–A

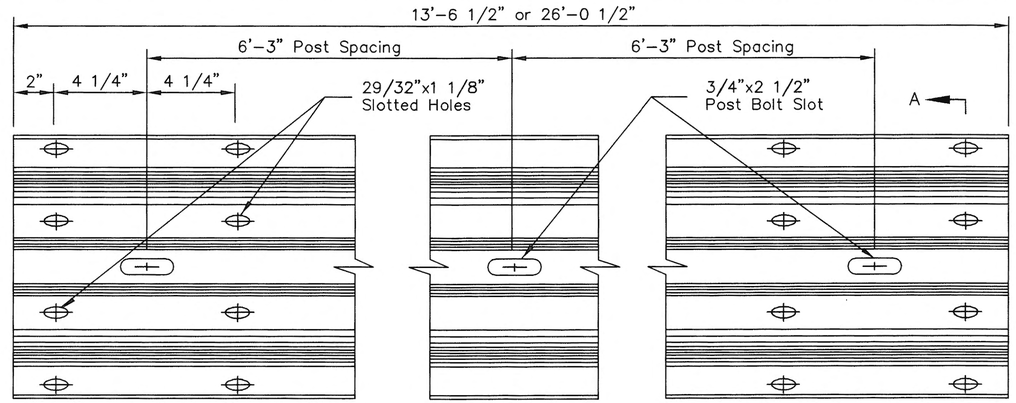

STANDARD W–BEAM PANEL

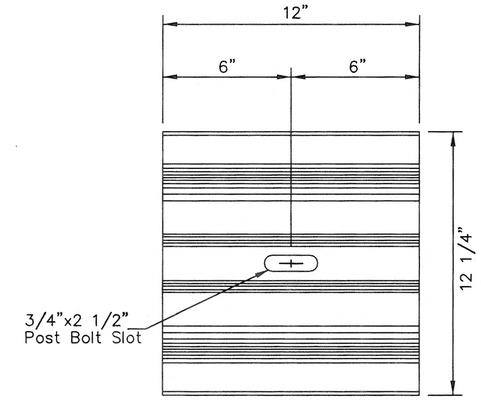

W–BEAM BACKUP PLATE

GENERAL NOTES:

1. Provide hardware compliant with the AASHTO/AGC/ARTBA "A Guide to Standardized Highway Barrier Hardware, latest edition.
2. Install back–up plates between blockouts and w–beam or thrie–beam rail at intermediate (non–splice) posts when steel blockouts are used but not with wood, rubber, plastic, or other approved blockouts.
3. Provide Thrie beam and W–beam compliant with AASHTO M180A. Use 12 gauge (0.105") thick steel for both.

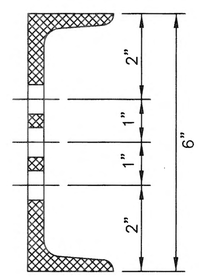

SECTION B–B

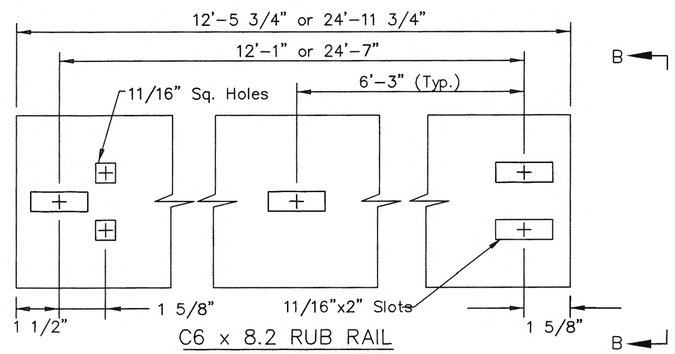

C6 x 8.2 RUB RAIL

ASTM A36 STEEL

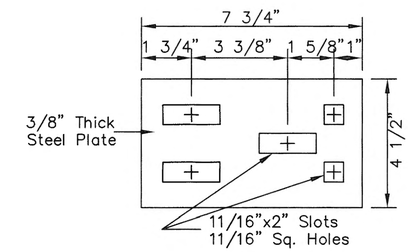

SPLICE PLATE

ASTM A36 STEEL

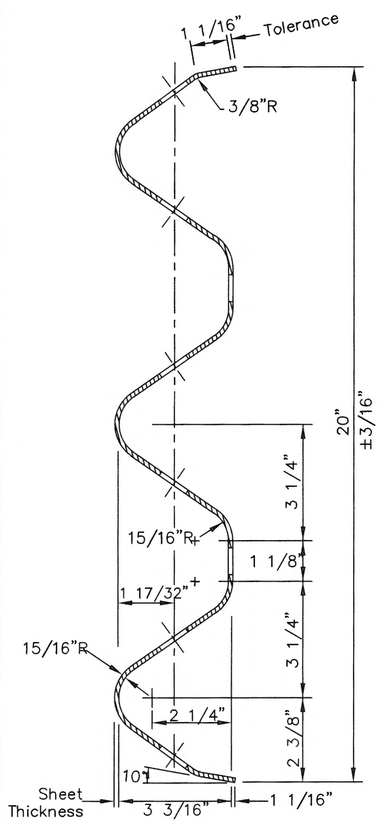

SECTION C–C

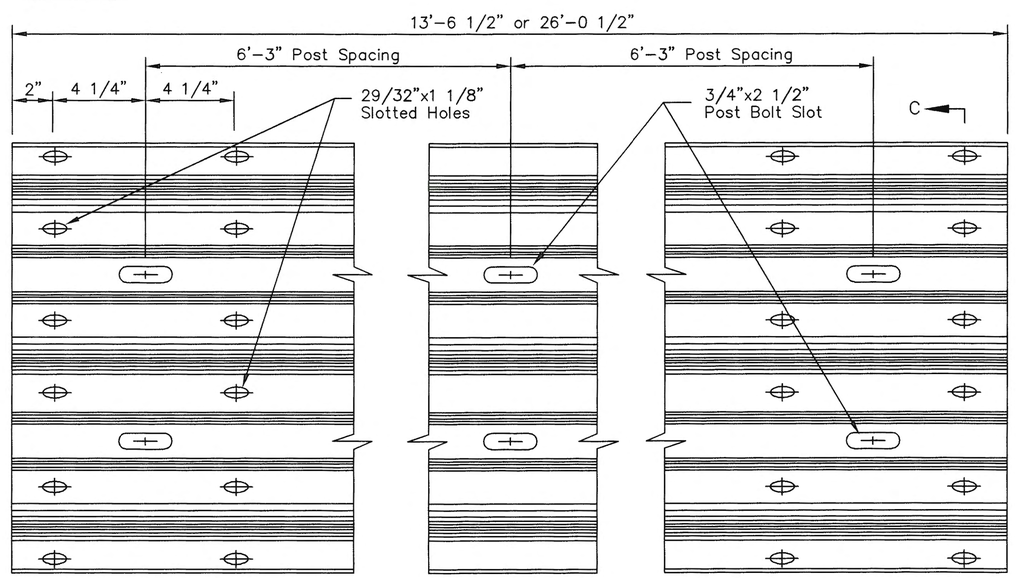

STANDARD THRIE BEAM PANEL

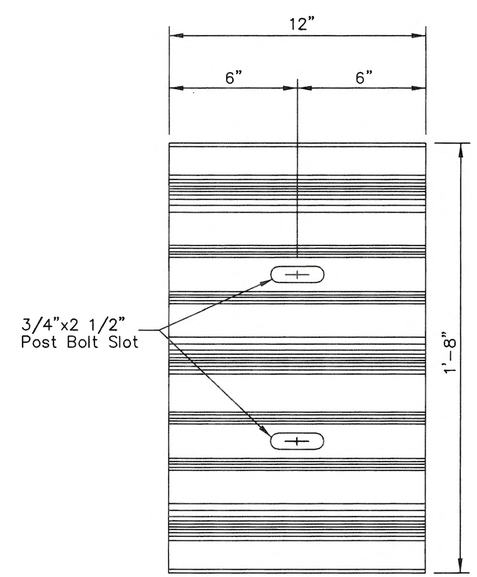

THRIE BEAM BACKUP PLATE

REVISIONS		
Date	Description	By
4/28/10	Revise General Notes	KJS

State of Alaska
Department of Transportation
& Public Facilities

STANDARD GUARDRAIL HARDWARE (RAILS AND SPLICES)

APPROVED

Kurtis J. Smith
CE-7347
4/28/10

Date 5/31/12

G–00.02

HMF 3-18-20

G-00.02	SHEET 3 of 4

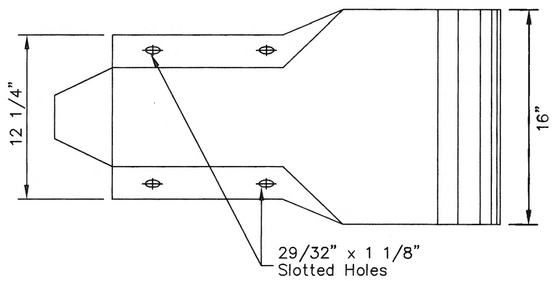

PROFILE

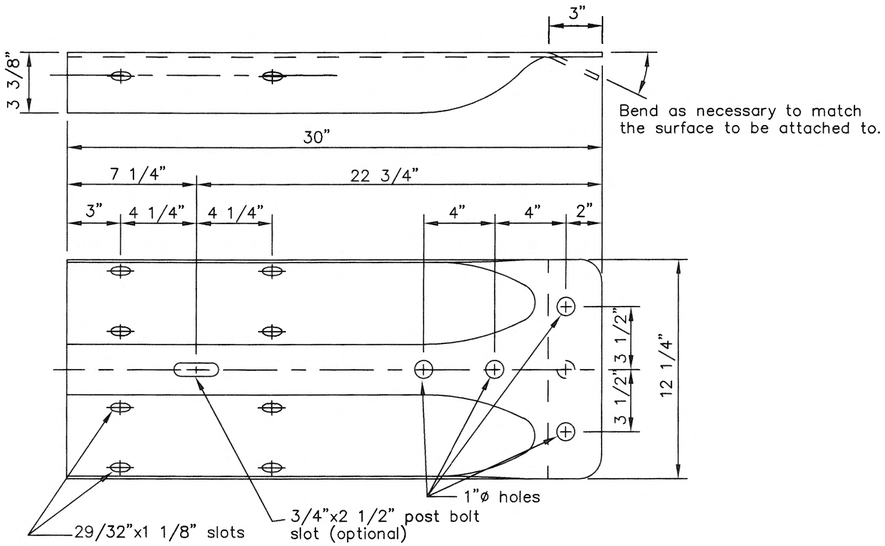

STANDARD W-BEAM TERMINAL CONNECTOR

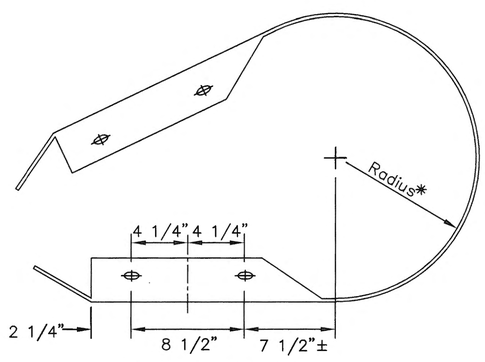

W-BEAM PLAN VIEW

*Radius to be specified on the plans

STANDARD W-BEAM END SECTION

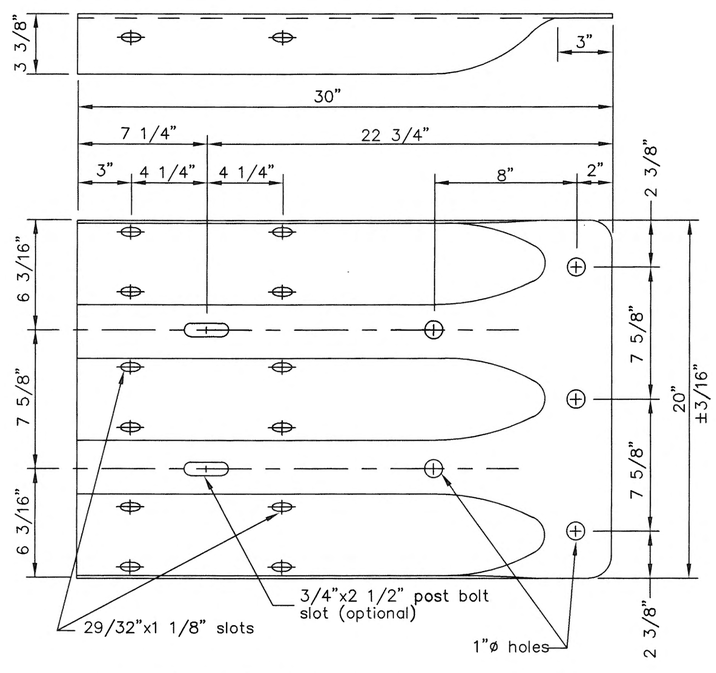

STANDARD THRIE BEAM TERMINAL CONNECTOR

GENERAL NOTES:

1. W-Beam and Thrie Beam Terminal Connectors shall conform to AASHTO M180, Class B, Type 2.
2. W-Beam end sections shall conform to AASHTO M180, Class A, Type 2.
3. All covered hardware shall comply with the AASHTO/AGC/ARTBA "A Guide to Standardized Highway Barrier Hardware", latest edition.

REVISIONS

Date	Description	By
3/15/99	Delete Thrie End Sect.	KJS

State of Alaska
Department of Transportation
& Public Facilities

STANDARD GUARDRAIL HARDWARE (TERMINAL CONNECTORS)

APPROVED

Date 5/31/12

G-00.02

HWF 3/28/10

G-00.02

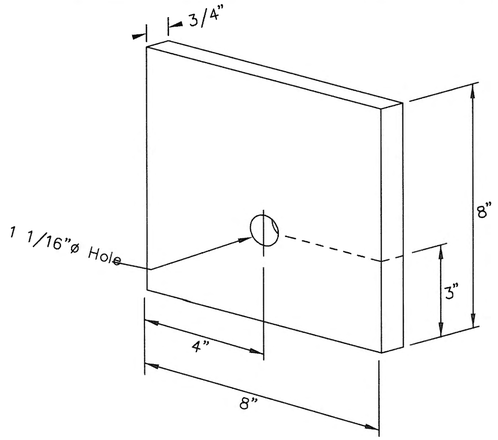

BEARING PLATE for CRT TERMINAL ANCHOR

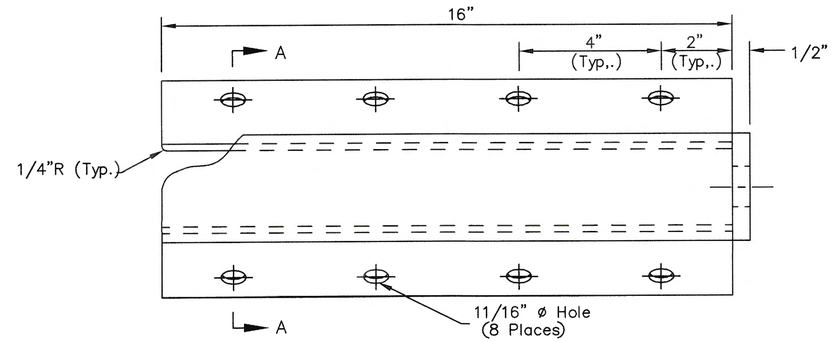

CABLE ANCHOR PLATE

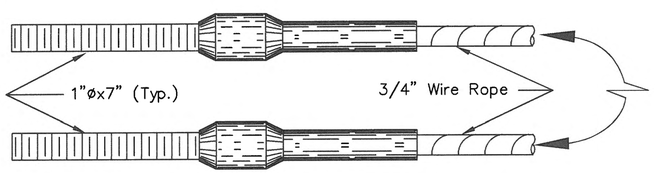

SWAGED FITTING DETAIL

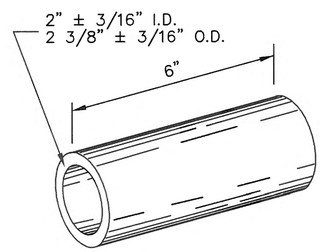

SLEEVE DETAIL

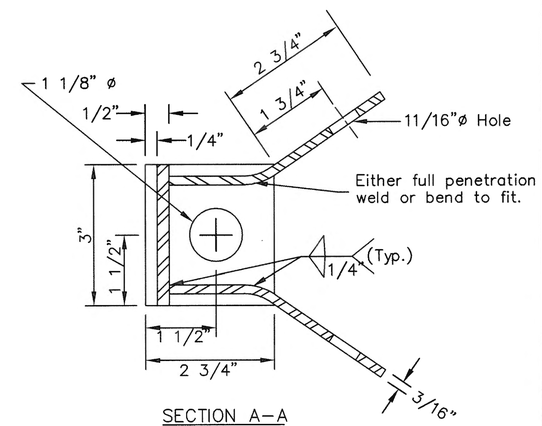

SECTION A–A

CONTROLLED RELEASE TERMINAL HARDWARE DETAILS

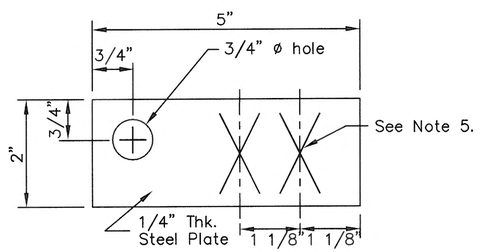

RADIUS I.D. PLATE

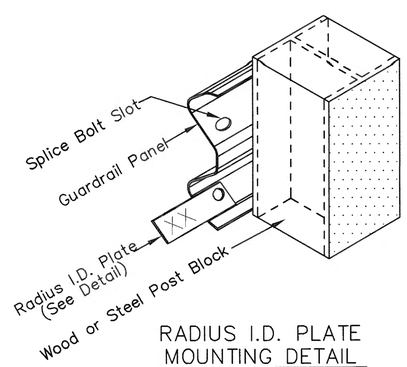

RADIUS I.D. PLATE MOUNTING DETAIL

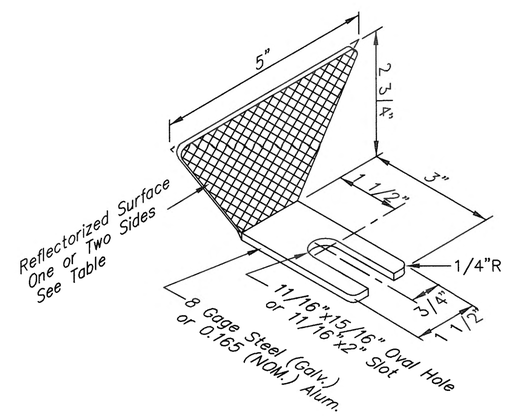

GUARDRAIL REFLECTOR

Guardrail Reflectors

Type	Color	Reflectorized
A	White	Front & Rear
B	White	Front
C	Yellow	Front
D	Yellow	Front & Rear

GENERAL NOTES:

1. Cable Anchor Plate may be formed in single unit or welded fabrication.
2. Anchor Cable Assembly shall conform to AASHTO M–30 with Type II Wire Rope.
3. Sleeve for Wood Posts shall conform to the requirements of ASTM A120 and shall be of 2–inch galvanized standard pipe. Sleeve shall be a tight, pressed fit in post.
4. Bolts, nuts and washers shall conform to ASTM A–325 and galvanized in accordance with ASTM A–153.
5. Radius ID plates shall be attached to all shop–bent guardrail sections. They shall be bolted to the back side of the guardrail panel with the lower splice bolt nearest the P.C. of the radius.
6. Rail bend radius in feet shall be shown as "XX" on the radius ID plate. Digits shall be etched or stamped and have a min. height of 1 1/2" and a max. width of 3/4". The plate shall be galvanized after digits are marked.
7. All covered hardware shall comply with the AASHTO/AGC/ARTBA "A Guide to Standardized Highway Barrier Hardware", latest edition.

REVISIONS

Date	Description	By
3/15/99	Delete BCT Hardware	KJS

State of Alaska
Department of Transportation
& Public Facilities

STANDARD GUARDRAIL HARDWARE (MISCELLANEOUS)

APPROVED

Date 5/31/12

49TH STATE OF ALASKA — Karen A. Smith CE-7547 4/28/10

G–00.02

HWF 3-19-20

G-04.10S

SHEET 1 of 1

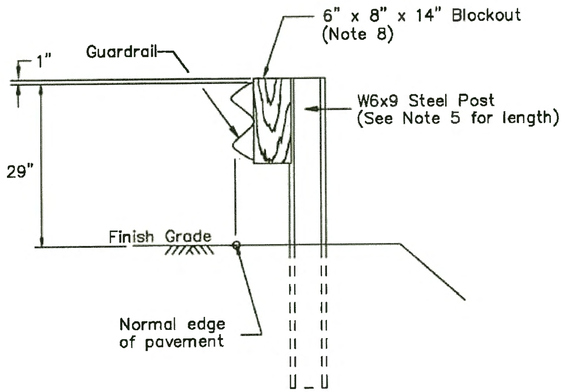

TYPE I POST INSTALLATION

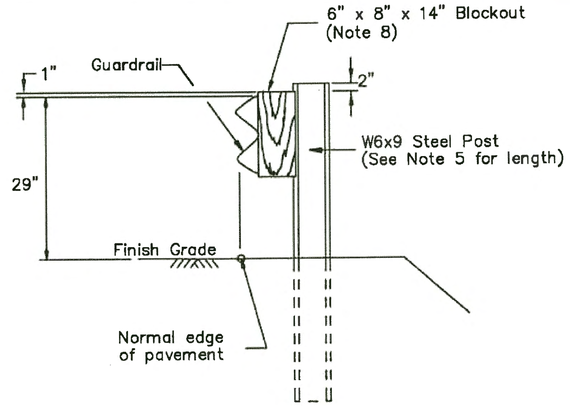

TYPE II POST INSTALLATION

(Facilitates raising rail for future overlays.)

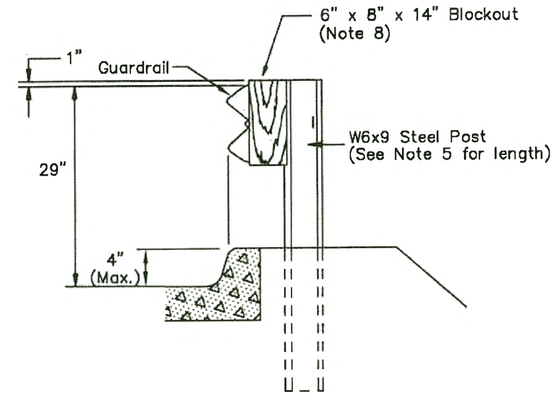

CURB DETAIL

TYPE III POST INSTALLATION

NOTE: Curb should not be installed with guardrail when the speed limit exceeds 40 mph.

GENERAL NOTES:

1. Attach guardrail reflectors at 50' centers beginning with the first post. Use Type A reflectors unless specified otherwise.
2. Provide hardware compliant with the AASHTO/AGC/ARTBA "A Guide to Standardized Highway Barrier Hardware," latest edition.
3. See Standard Drawing G-00 for hardware details.
4. Mount rail to block with bolt on approaching traffic side of block web.
5. See Standard Drawing G-10 for post lengths corresponding to different combinations of slope and behind-post embankment width.
6. Typical post spacing is 6'-3" center to center.
7. This barrier is acceptable under NCHRP 350, TL-3.
8. Use wood, rubber, plastic, or other NCHRP 350 or MASH approved blockouts designed to be used with steel posts
9. Use 25 linear foot transition to match height of existing or new rail elements and end treatments.
10. W6x8.5 steel post may be substituted for W6x9 steel post.

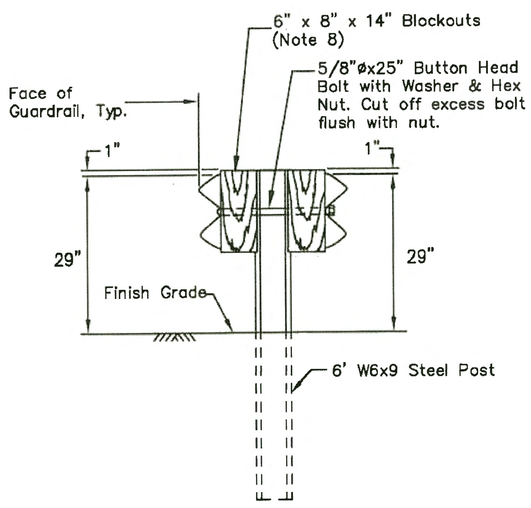

TYPE IV DOUBLE SIDED INSTALLATION

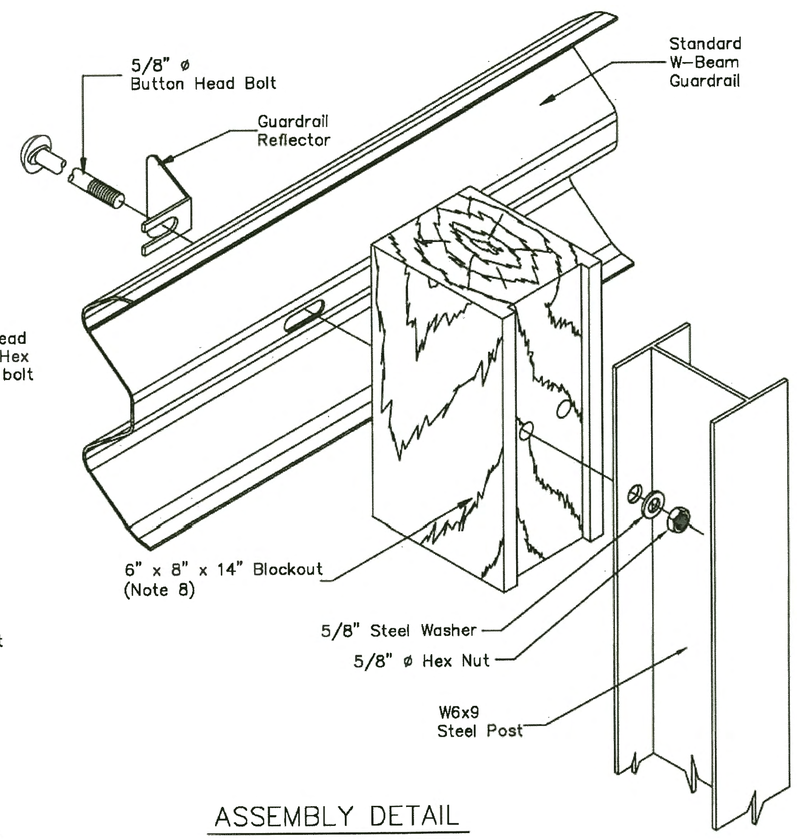

ASSEMBLY DETAIL

(Type I post shown)

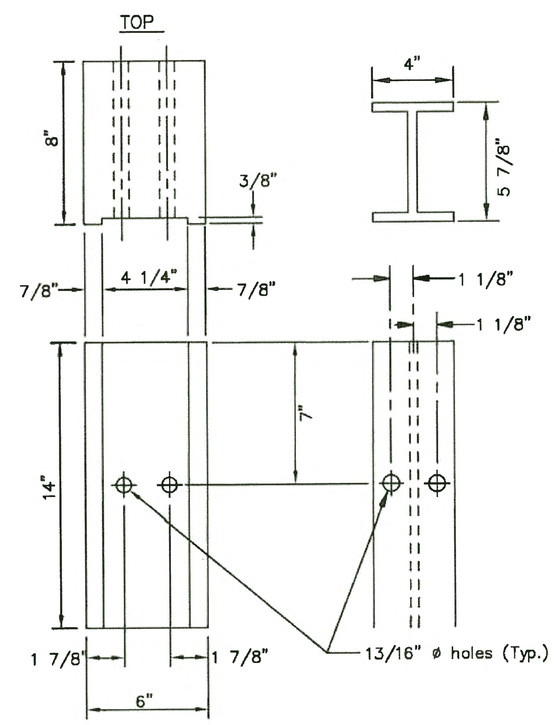

BACK

6" x 8"
WOOD BLOCK

FACE

W6x9
STEEL POST

REVISIONS		
Date	Description	By
3/1/83	Revised gen. notes	Gdo
1/1/86	Revised hanger detail	Gdo
3/15/99	Block and post length	KJS
4/1/13	Add double-sided detail and increase g.r. height	JCJ

State of Alaska
Department of Transportation
& Public Facilities

STEEL POST
W-BEAM GUARDRAIL

APPROVED

STATE OF ALASKA 49TH Jefferson D. Jeakers CE 12295 5/1/13 REGISTERED PROFESSIONAL ENGINEER

Date 05/15/13

G-04.10S

HMF
3/8/00

G-10.01

SHEET | of |

GENERAL NOTES:

1. This drawing is to be used for post length determination only. See the plans for slopes and behind-post embankment widths.
2. To determine post length, identify the case that matches site conditions and read the length corresponding to the pertinent guardrail type.
3. These dimensions apply to both curbed and uncurbed sections.

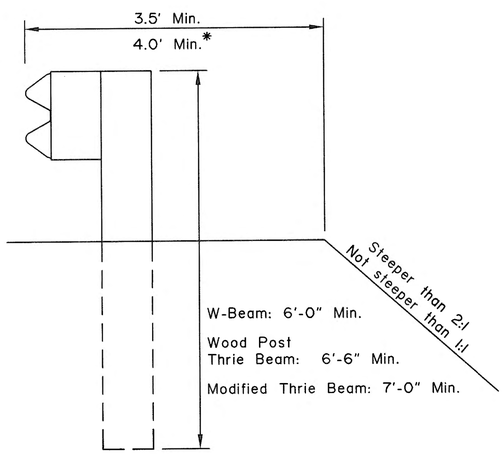

CASE 1

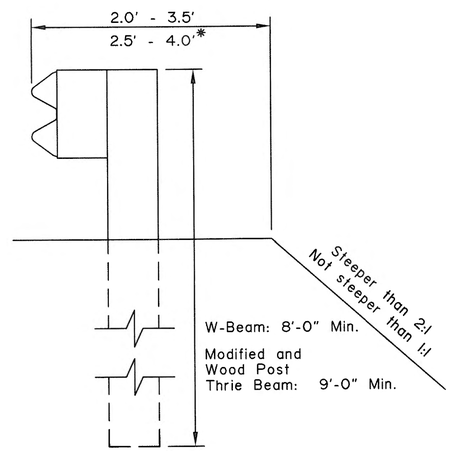

CASE 2

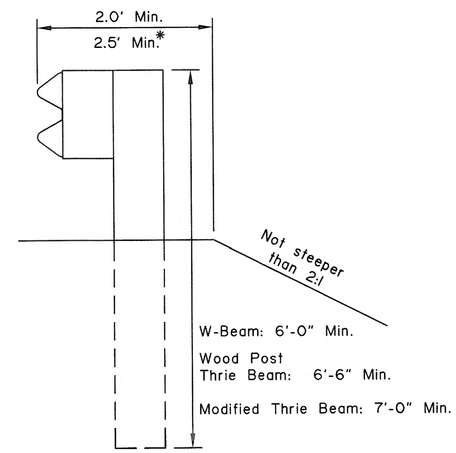

CASE 3

* with Modified Thrie Beam'

REVISIONS		
Date	Description	By
12/2/99	Delete Case 4,5, and 6	KJS

State of Alaska
Department of Transportation
& Public Facilities

BEAM GUARDRAIL
POST INSTALLATION

APPROVED

Date 3/15/99

G-10.01

TMF 3.18.20

G-13.00

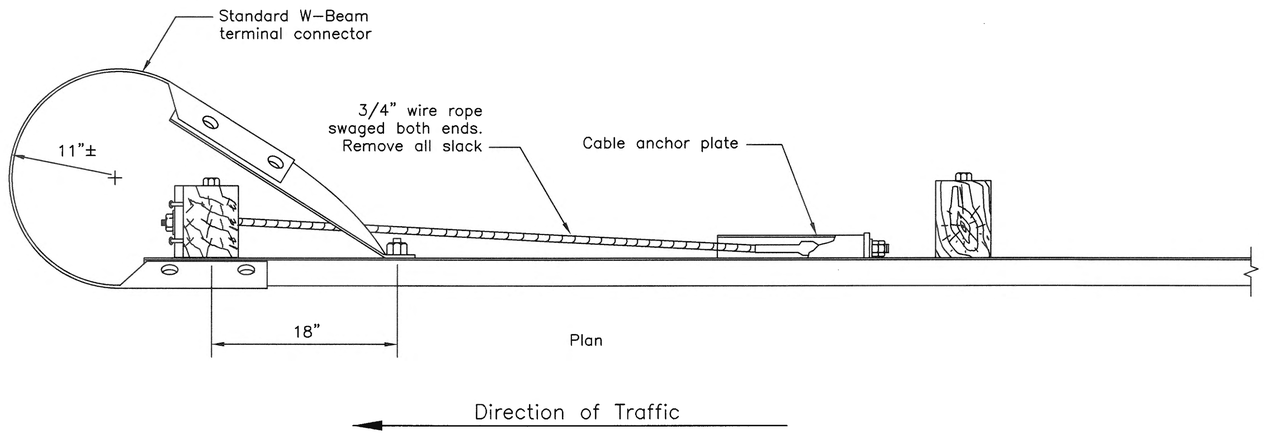

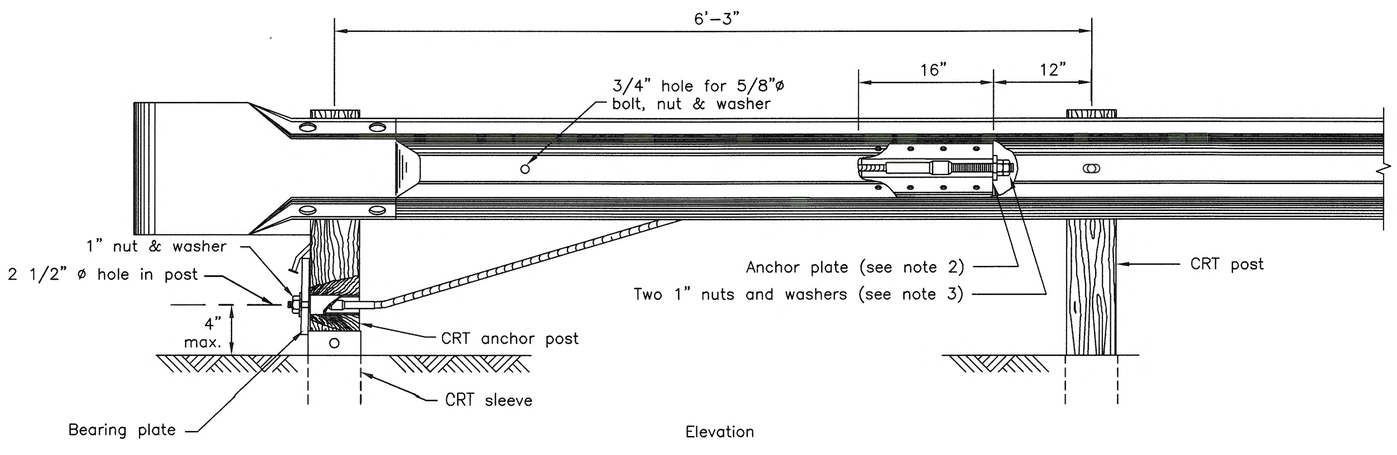

TERMINAL ANCHOR

GENERAL NOTES:

1. Hardware details not shown here shall conform to drawings G-00, G-04W, G-25W
2. Fasten anchor plate to rail with eight 5/8" x 1 1/2" machine bolts with hex nut and washer. Place washer on face side of rail.
3. Torque outside nut against inside nut a minimum of 100 ft-lbs.
4. Toenail bearing plate with two 10d galvanized nails at corners to prevent turning.
5. All covered hardware shall comply with the AASHTO/AGC/ARTBA "A Guide to Standardized Highway Barrier Hardware", latest edition.
6. This assembly will typically be used on the downstream ends of guardrail runs on one-way streets.
7. This assembly is generally not intended for divided highway applications due to possible 2-way construction detours. Designer should consider future detouring needs when deciding whether to use this terminal.
8. This design does not meet NCHRP 350 TL 3 standards. It is not intended as a crash worthy barrier end treatment for approach end impacts.

REVISIONS		
Date	Description	By

Sheet 1 of 1

State of Alaska
Department of Transportation
& Public Facilities

W BEAM GUARDRAIL
DOWNSTREAM END
ANCHOR

49TH Kerby A. Smith CE-7347

APPROVED

49TH Timothy G. Miller CE-8649

Date 2/28/03

G-13.00

HMF 3.18.20

G-20.11

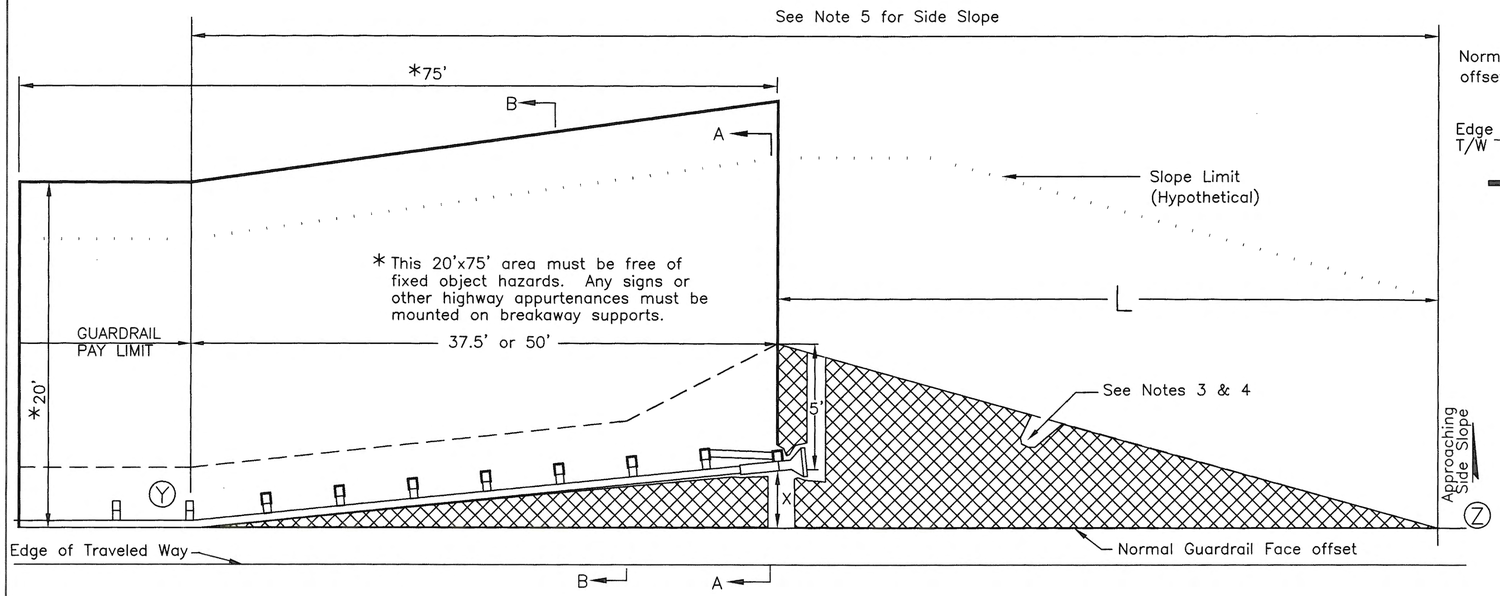

STANDARD GUARDRAIL TERMINAL WIDENING DETAIL

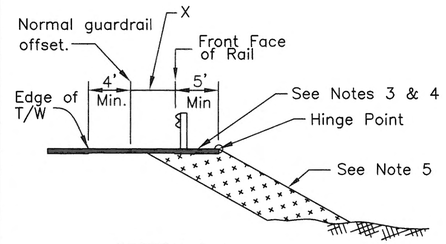

SECTION A–A

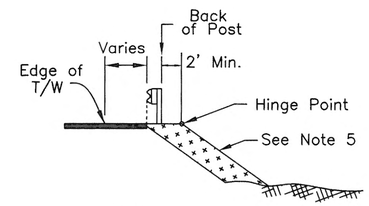

SECTION B–B
(Applies to both drawings)

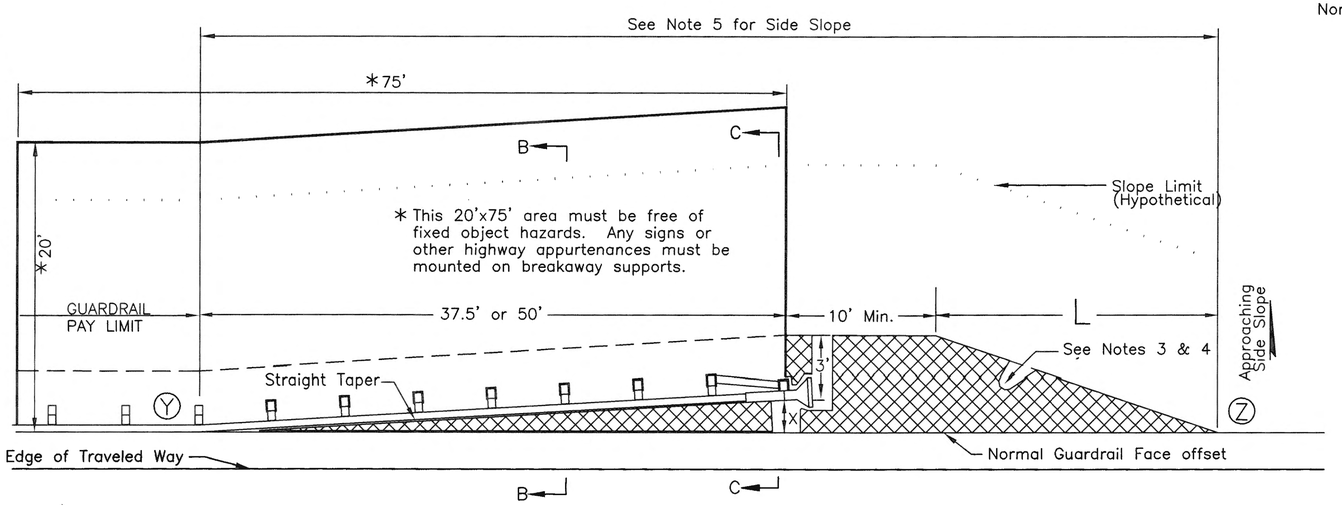

ALTERNATE GUARDRAIL TERMINAL WIDENING DETAIL

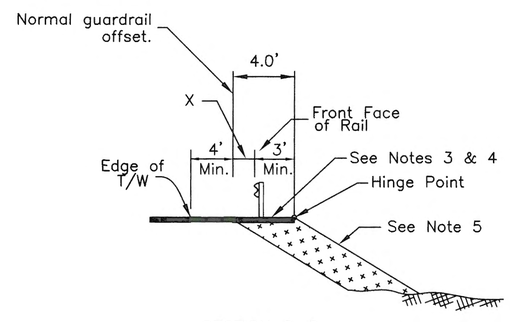

SECTION C–C

X: End offset. See manufacturer's information for the range of acceptable (NCHRP 350 or MASH compliant) end offsets for each terminal.

Taper Lengths (L) for Common End Offsets (X)		
End Offset	Standard Detail	Alternate Detail
0'	15.0'	10.0'
1'	17.0'	10.0'
1.5'	20.0'	15.0'
2'	22.0'	15.0'
2.5'	25.0'	15.0'
4'	30.0'	20.0'
Interpolate if the end offset falls between table values		

GENERAL NOTES:

1. The standard detail applies to all approved guardrail terminals, including those with parabolic flares. The alternate detail may only be used with straight terminals. The terminal details shown are for illustration only – see manufacturer's drawings for actual post, rail, etc. drawings.
2. Use the standard detail for all terminals except when upgrading existing non–NCHRP 350 or MASH compliant terminals to NCHRP 350 or MASH compliant terminals where site conditions make the use of the standard detail infeasible. In that case, use the alternate detail.
3. Construct the hatched areas to match the slope of the adjacent shoulder to a maximum slope of 10:1. Maintain 10:1 for steeper shoulders. Match the slope when the shoulder slopes toward the road as well as away from the road.
4. On paved roads, the hatched areas shall be paved. On gravel roads, surface the hatched areas with the same materials used to surface the travel lanes.
5. From point Ⓨ to point Ⓩ make the side slope match the approaching side slope except where it is flatter than 4:1. In that case, the slope may be steepened to 4:1.
6. Attach a flexible marker to the first point (where the flare begins) and the end post of each terminal.
7. The maximum allowable height for foundation tubes or other steel components of terminal post breakaway systems is 4 inches above the surrounding grade.
8. The details on this sheet do not apply to Controlled Release Terminals (G–25) or Downstream End Anchors (G–13).
9. On two–way undivided roads, the details on this sheet do apply to NCHRP 350 or MASH compliant guardrail terminals on both the approach and downstream ends.

REVISIONS		
Date	Description	By
3/6/02	Change ET Offset	KJS
2/28/03	Major Revisions	KJS
4/28/10	Revise General Notes	KJS

Sheet 1 of 1

State of Alaska
Department of Transportation
& Public Facilities

WIDENING FOR GUARDRAIL END TERMINALS

APPROVED

Date 5/31/12

G–20.11

AMF 3.18.26

G-28.00

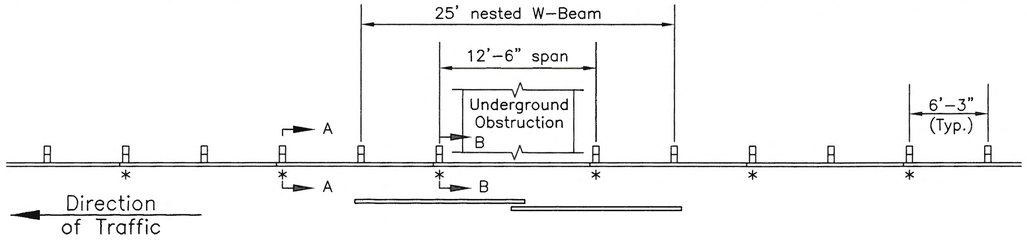

CASE A – ONE POST OMITTED (NESTED RAIL SPLICE AT OMITTED POST)

For obstruction widths up to 10'-6"

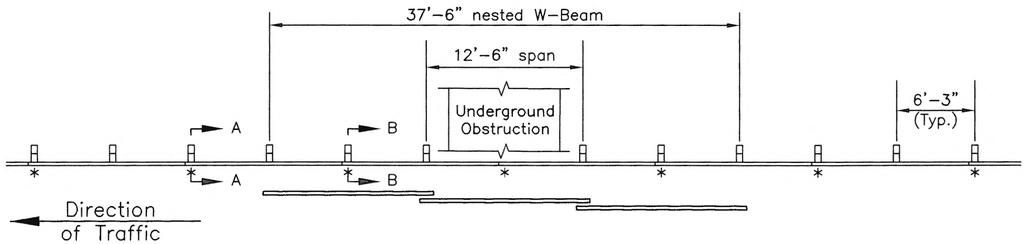

CASE B – ONE POST OMITTED (NESTED RAIL SPANS OMITTED POST)

For obstruction widths up to 10'-6"

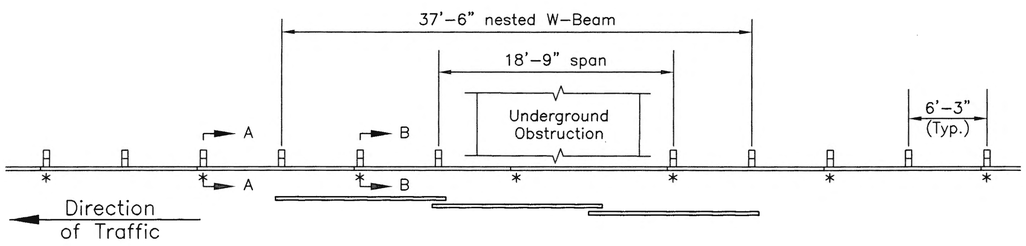

CASE C – TWO POSTS OMITTED

For obstruction widths from 10'-6" to 16'-9"

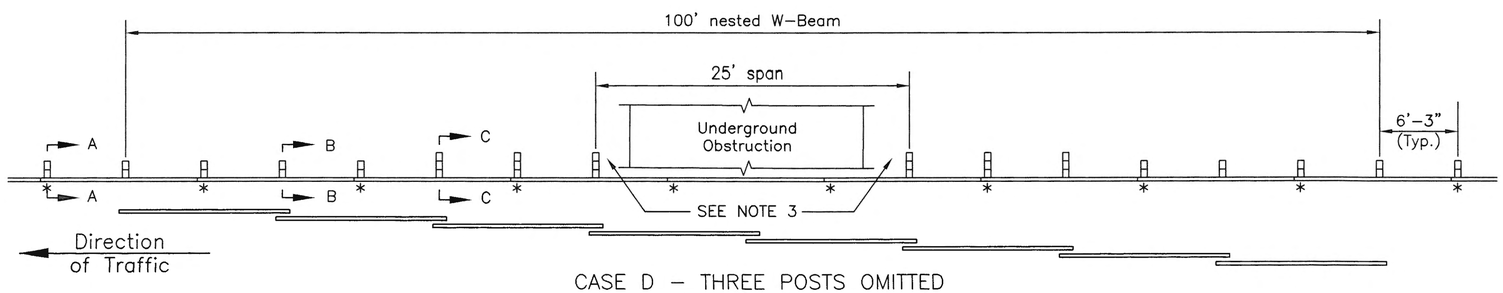

CASE D – THREE POSTS OMITTED

For obstruction widths from 16'-9" to 20'-6"

* Designates Splice Location

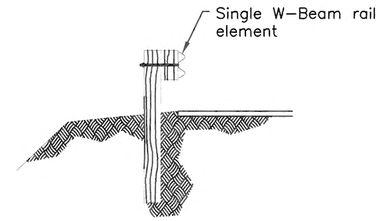

SECTION A–A

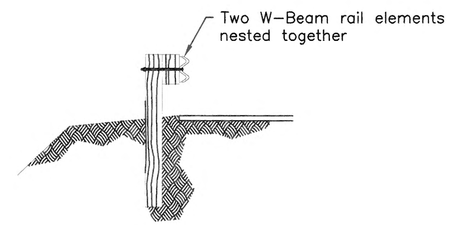

SECTION B–B

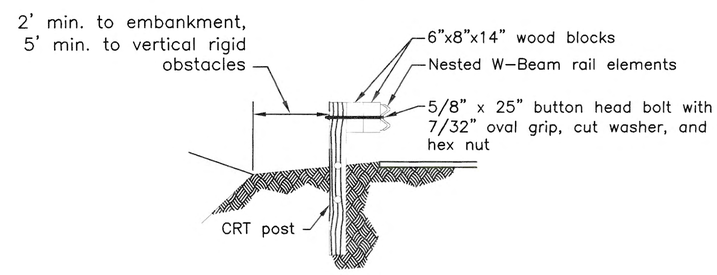

SECTION C–C

CROSS SECTIONS

GENERAL NOTES

1. See Standard Drawings G–00, G–04, G–10 for additional details, and G–25 Sheet 1 of 3 for CRT post details.
2. For one–way traffic locations Case D may be modified so that only the posts trailing the span are CRT posts with double blocks.
3. In Case D only, provide 2' minimum clearance between posts and underground obstruction.
4. Standard steel posts with standard wood blocks (or NCHRP 350 compliant synthetic blocks) may be used for all posts except those indicated to be CRT posts.
5. Install nested rail element with leading edge lapped behind primary rail element.
6. Cases A and B were tested under NCHRP 230 guidelines but the FHWA considers them equivalent to an NCHRP 350 Test Level 2 design. Case C has not been tested (as of March, 03) but the FHWA considers it equivalent to an NCHRP 350 Test Level 3 design. Case D is NCHRP 350 Test Level 3 tested and approved.

REVISIONS		
Date	Description	By

Sheet 1 of 1

State of Alaska
Department of Transportation
& Public Facilities

LONG SPAN
W BEAM GUARDRAIL

APPROVED

Date 2/28/03

G–28.00

HMF 3.18.20

M-20.13

SHEET 1 of 1

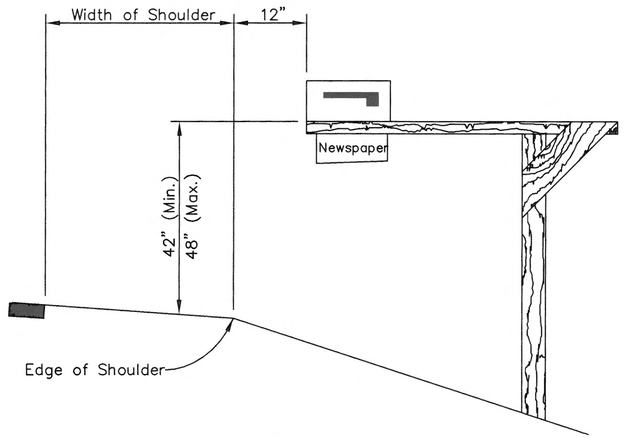

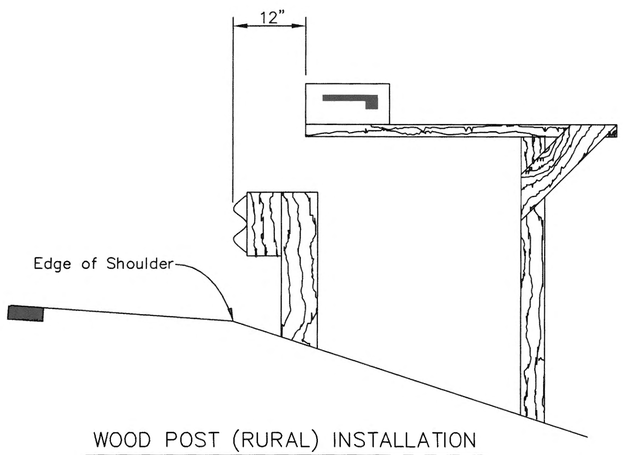

WOOD POST (RURAL) INSTALLATION

Single or Double Box

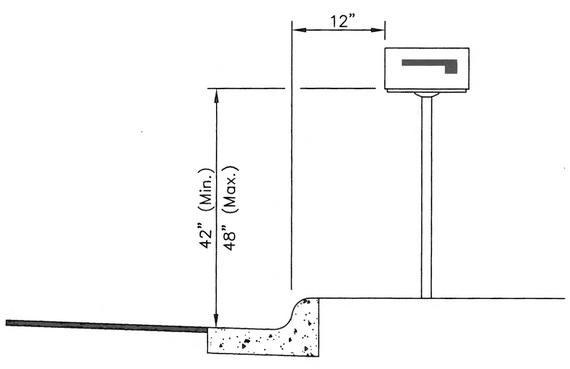

METAL POST (URBAN) INSTALLATION

Single or Double Box

Vc = Average Daily Traffic on Cross Road (vehicles per day)

Vm = Average Daily Traffic on Main Road (vehicles per day)

n = Number of Mailboxes at Mail Stop

Main Road Speed Limit	"D1" Distance (ft) n*Vc*Vm	
	≤4000	>4000
≤ 40	65	200
> 40	65	295

Main Road Speed Limit	"D2" Distance (ft) Cross Road ADT	
	≤4000	>4000
≤ 40	100	100
> 40	150	200

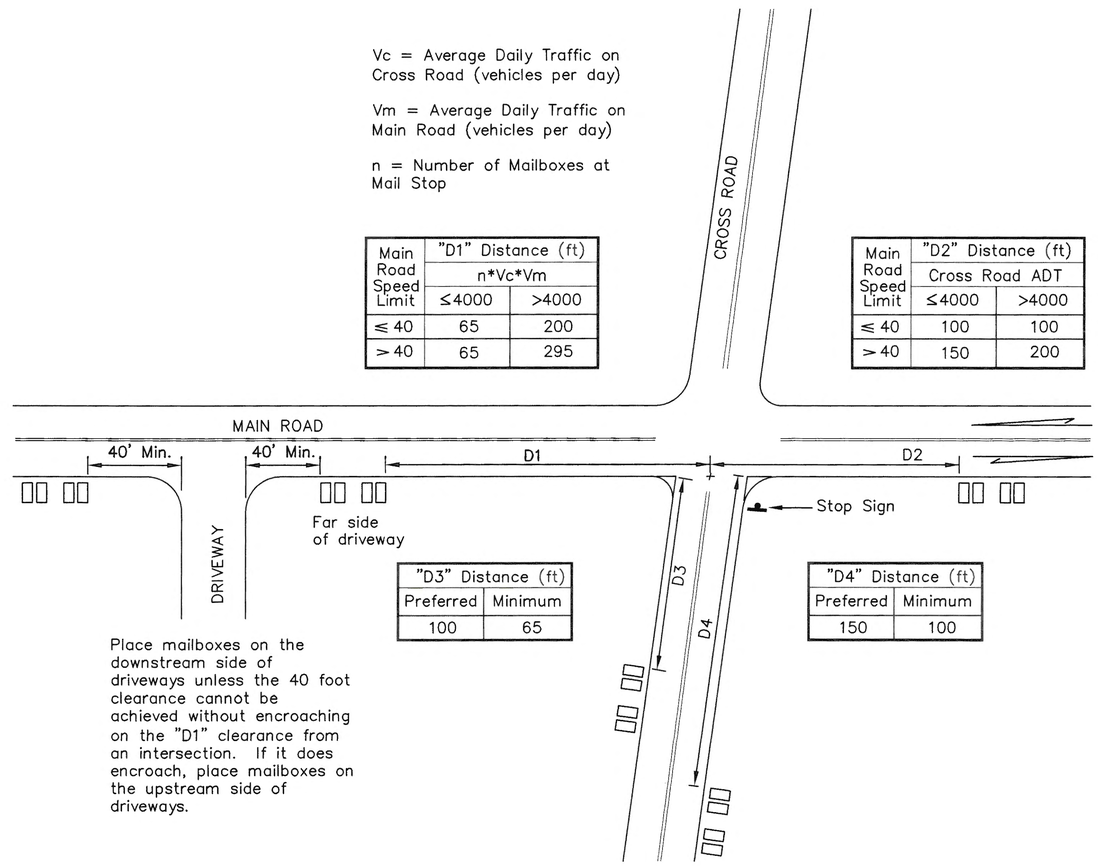

"D3" Distance (ft)	
Preferred	Minimum
100	65

"D4" Distance (ft)	
Preferred	Minimum
150	100

Place mailboxes on the downstream side of driveways unless the 40 foot clearance cannot be achieved without encroaching on the "D1" clearance from an intersection. If it does encroach, place mailboxes on the upstream side of driveways.

MAILBOX LOCATION AT INTERSECTIONS AND DRIVEWAYS

GENERAL NOTES:

1. Install mailboxes conforming to U.S. Postal Service requirements.
2. Install mailbox supports conforming to Standard Drawing M-23.
3. Mailbox supports shall not present a rigid, unyielding impact resistant hazard to road traffic, but shall be flexible and yielding to vehicular impact. Install crashworthy supports in accordance with Standard Drawing M-23.
4. Installation shall be on the right side of roadway in the direction of mail carrier travel with the exception of one-way streets where they may be placed on either side.
5. Locate mailboxes to minimize dangers to road traffic, carriers and postal recipients.
6. Provide a minimum shoulder width of 8' unless otherwise approved by Engineer. Install single and double mailbox supports separated by at least 3', and desirably 4', from each other. More than two boxes on a single support is allowable only as shown on M-23.
7. Newspaper receptacles shall conform to the same setback and support regulations as mailboxes. Where newspaper receptacles and mailboxes are to be mounted together, the newspaper receptacle may be mounted beneath the mailbox or on the side of the mailbox support opposite the reflecting marker.

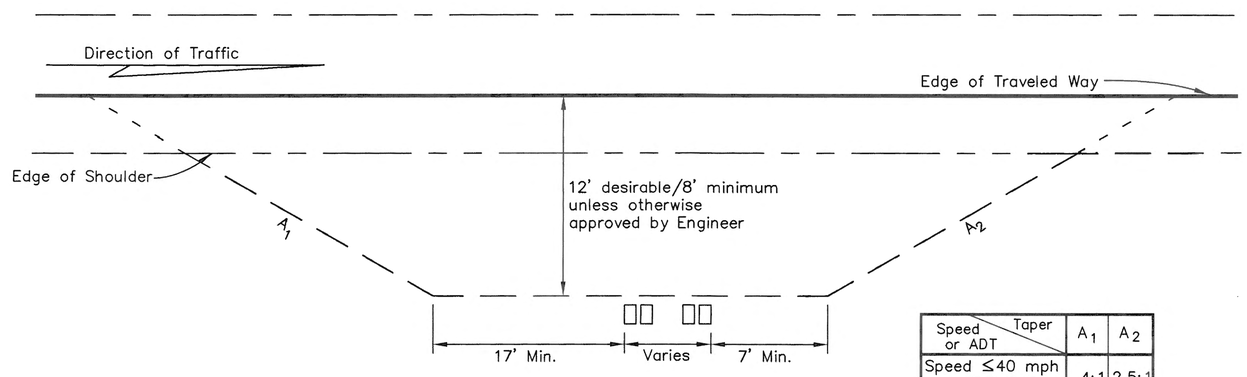

TURNOUTS FOR GROUPED BOXES

Speed or ADT \ Taper	A_1	A_2
Speed ≤40 mph and ADT ≤400	4:1	2.5:1
Speed >40 mph or ADT >400	20:1	12:1

TURNOUT TAPERS

REVISIONS		
Date	Description	By
4/1/93	Gen. Note 8	Gdo
1/1/96	Revise Min. Height	Gdo
4/28/10	Tables, detail, notes	KJS

State of Alaska
Department of Transportation
& Public Facilities

MAILBOX LOCATION

APPROVED

Date 5/31/12

M-20.13

HMF 3-18-20

M-23.12

SHEET 1 of 2

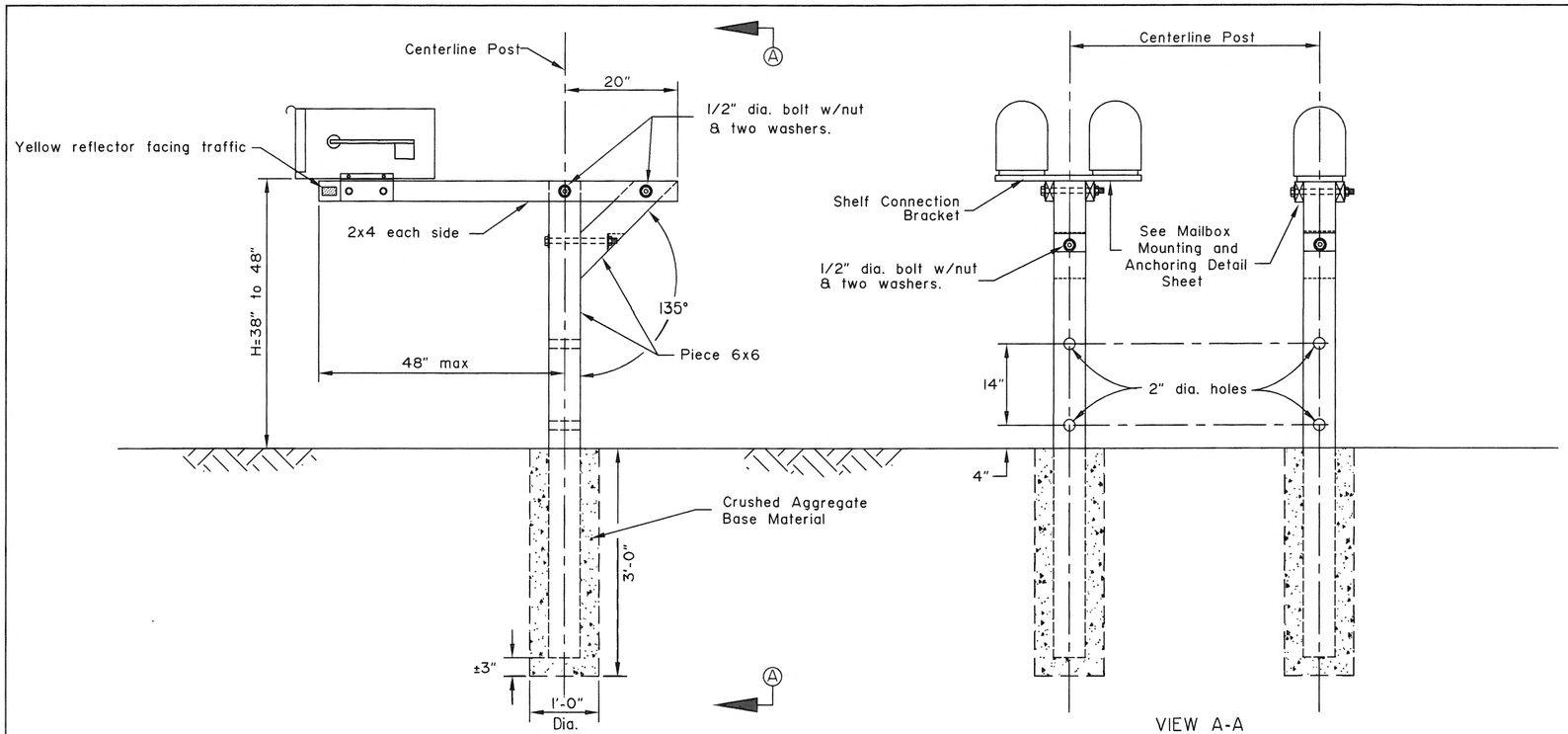

TYPICAL WOOD CANTILEVER INSTALLATION

VIEW A-A

GENERAL NOTES:

1. See Standard Drawing, 'Mailbox Location', for locating posts and boxes along roadway.
2. Posts shall be 6"x6" Treated Wood Post S4S or 2" (Max.) Standard Weight Steel Pipe.
3. Each support structure shall not accomodate more than two mailboxes unless the support structure conforms to the requirements of the U.S. Postal Service and is approved by the Engineer.
4. Other steel or aluminum structural sections may be used except, the stiffness properties equivalent to the 2" dia. standard weight steel pipe shall not be exceeded.
5. Reflectors shall have a minimum area of 4.5 sq. in.

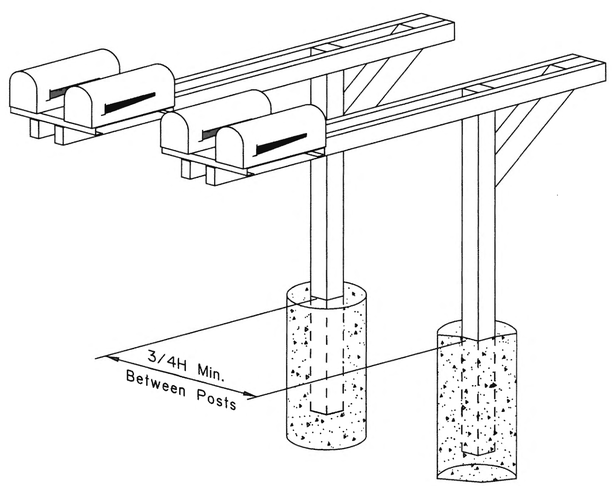

TYPICAL GANG BOX INSTALLATION

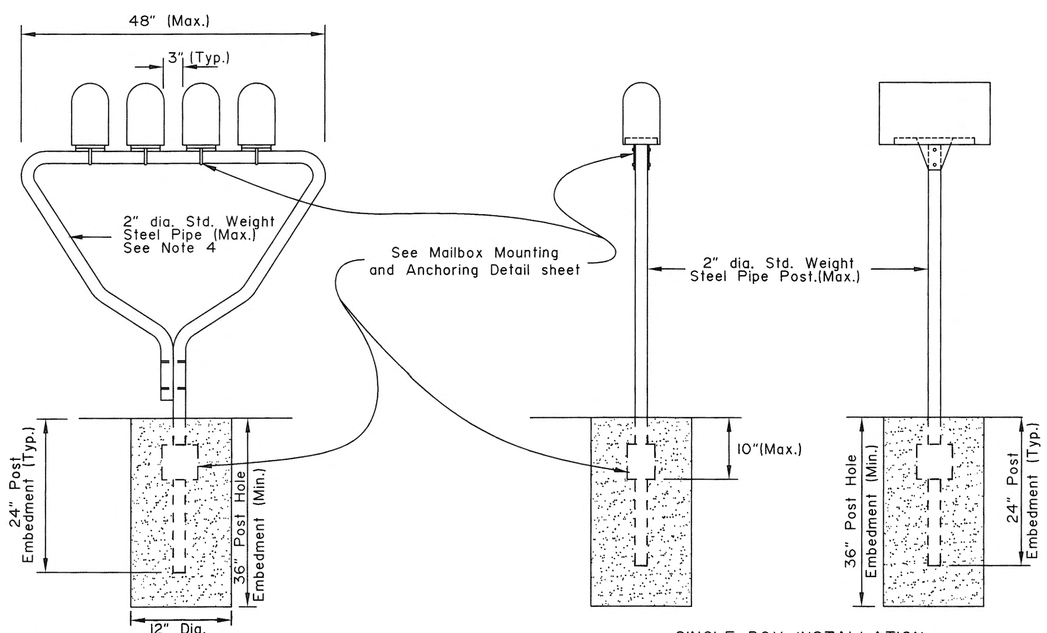

MULTIPLE BOX INSTALLATION (U.S.P.S. Approved)

SINGLE BOX INSTALLATION

METAL POST SUPPORTS (URBAN ONLY)

REVISIONS		
Date	Description	By
9/15/91	Mod w/USPS specs.	Gdo
4/1/93	Revise Embedment Depth	Gdo
1/1/96	Del. Specs./Min. Height	Gdo

State of Alaska
Department of Transportation
& Public Facilities

MAILBOX INSTALLATION

APPROVED

Date 12/1/87

M-23.12

HMF 3/18/21

M-23.12

SHEET 2 of 2

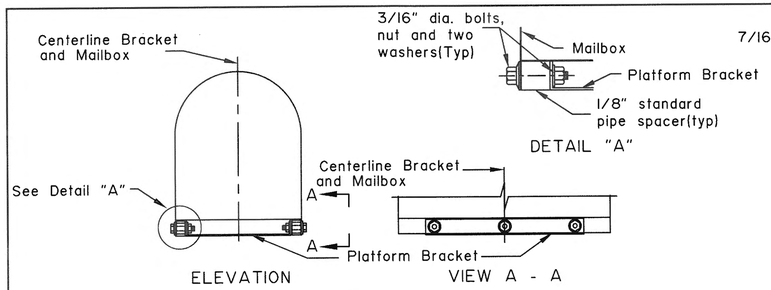

MAILBOX SUPPORT PLATFORM ASSEMBLY

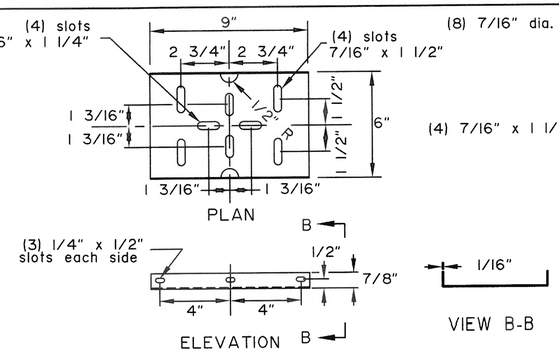

STEEL PLATFORM BRACKET

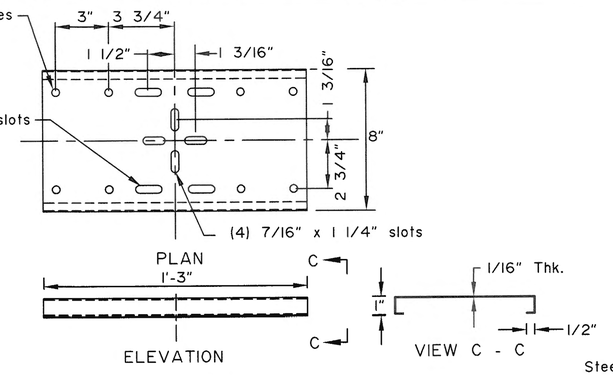

STEEL SHELF BRACKET

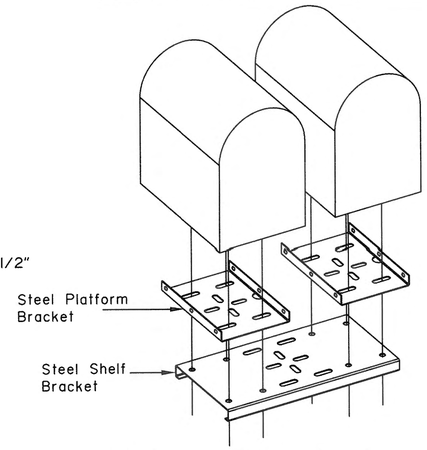

MAILBOX CONNECTION DETAIL

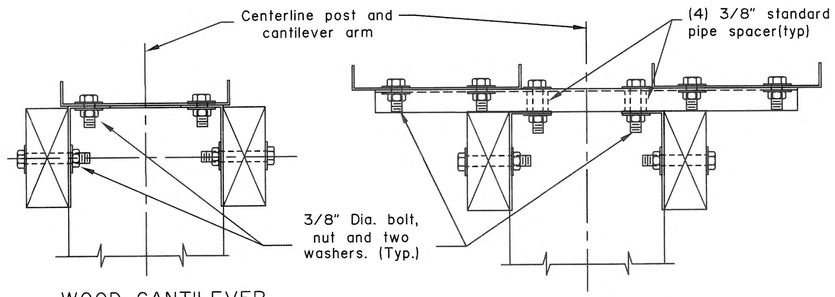

WOOD CANTILEVER ARM PLATFORM CONNECTION

WOOD CANTILEVER ARM SHELF CONNECTION

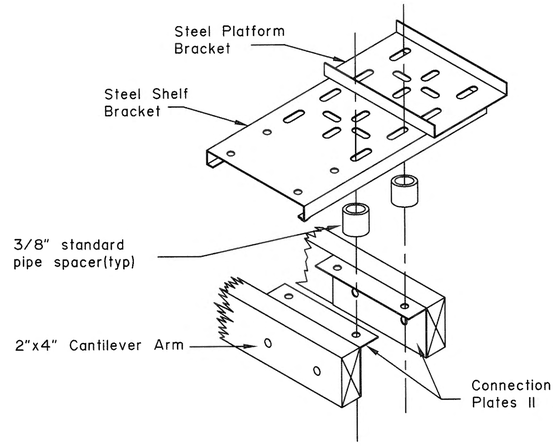

SHELF BRACKET CONNECTION DETAIL

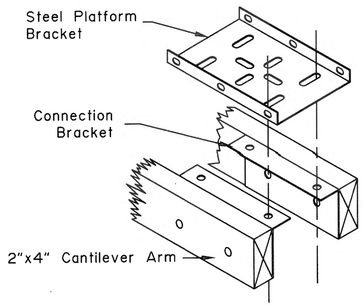

PLATFORM BRACKET CONNECTION DETAIL

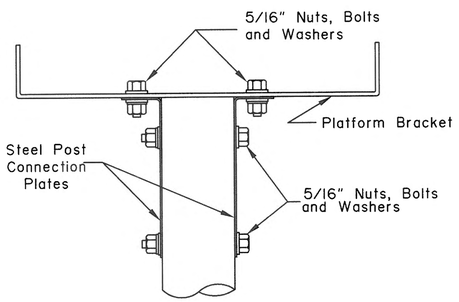

BRACKET ASSEMBLY DETAIL

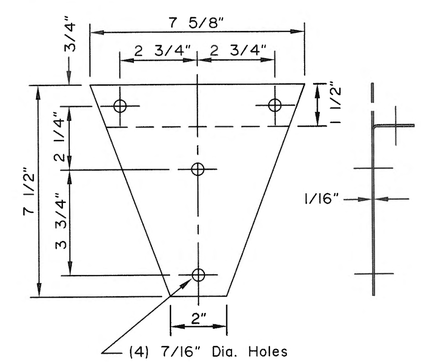

STEEL POST CONNECTION PLATES for STEEL PIPE POST

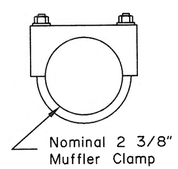

CLAMP

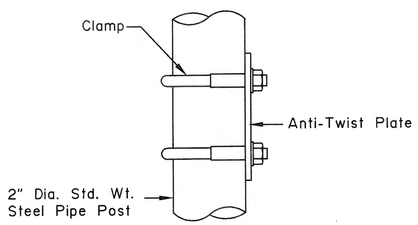

ANTI-TWIST PLATE ASSEMBLY DETAIL

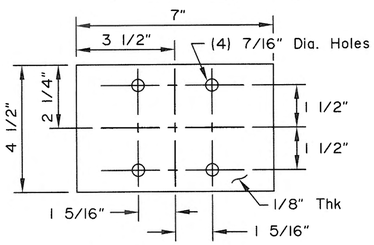

ANTI-TWIST PLATE for STEEL PIPE POST

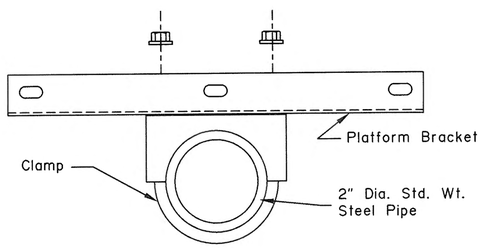

MULTIPLE BOX CLAMP ASSEMBLY DETAIL

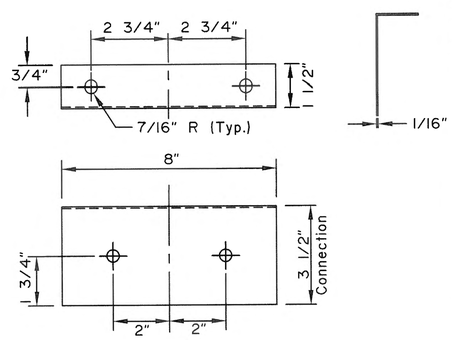

CONNECTION PLATES for WOOD CANTILEVER ARM

REVISIONS		
Date	Description	By

State of Alaska
Department of Transportation
& Public Facilities

MAILBOX MOUNTING AND ANCHORING DETAILS

APPROVED

Date 4/1/93

M-23.12

S-00.11

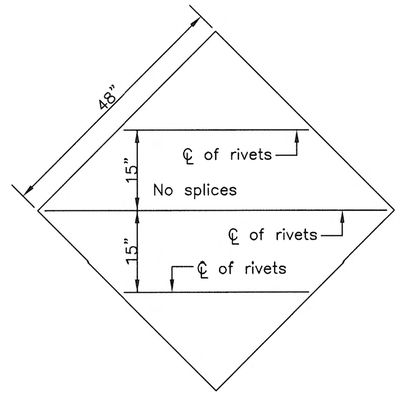

TUBE SIGN POST SPACING								
Sign Width (feet)	No. of Posts	Distance Between Posts	Sign Overhang	Post Type				Notes
				P.S.T.	Wood	Steel Tube	W–Shape	
0.5 to 4.0	1	–	0.5W	X	X	X		See Note 2.
4.5 to 10.0	2	0.6W	0.2W	X	X	X		See Note 3.
10.5 to 11.0	2	6	Varies	X	X	X		See Note 3.
11.5 to 13.0	2	8	Varies				X	
13.5 to 20.0	2	0.6W	0.2W				X	
20.5 to 22.5	3	8	Varies				X	
23.0 to 29.5	3	0.35W	0.15W				X	
30.0 to 31.5	4	8	Varies				X	
32.0 to 40.0	4	0.25W	0.125W				X	

SIGN POST SPACING NOTES:

1. Install sign support in accordance with the table above, unless otherwise required by plans or specifications.
2. Exceptions:
   a. Use one post for all E5–1 gore signs, regardless of width.
   b. Use one 2.5" P.S.T. for all STOP signs, with or without street name signs.
3. Supports placed within 7' of each other must be acceptable for that use. See Standard Drawing S–30 for the sizes of wood posts and P.S.T.s that may be used within 7'. See Manufacturer's documentation for breakaway couplings and tubes that may be used within 7'.
4. See Standard Drawing S–31 for frangible couplings, hinges, and foundations for tube and W–shape sign supports.

GENERAL NOTES

1. See the standard specifications for the aluminum alloys that you may use for sign sheeting and wind framing members.
2. Fabricate all signs from 0.125" thick aluminum sheeting.
3. Sign fabricators may use alternates to the zee shaped framing member with approval of the engineer, if the frame manufacturer certifies their design equals or exceeds the strength of the zee shaped design.
4. Install one piece wind framing members on all signs up to 23.5' wide. Use one splice in each wind frame on all signs wider than 23.5'. Locate splices at least 18" from all posts and panel edges. Stagger splices in adjacent framing members at least 8.0' apart.
5. Attach wind framing members with rivets or with an engineer approved, double sided, high strength, adhesive tape. Clean and handle sheeting and framing members and apply tape in accordance with the tape manufacturer's written instructions. Install two rivets in both ends of each framing member.
6. Use 3/16" diameter rivets conforming to aluminum alloy 6061–T6 for cold driven rivets, or aluminum alloy 6061–T43 for hot driven rivets.
7. Sign fabricators may use sign panels extruded with integral framing with approval of the engineer, if the manufacturer certifies their design equals or exceeds the strength of the 0.125" thick panel with framing attached to it.
8. Frame all signs taller than 8.0' with five wind framing members located (H–0.15)/4 spaces. If needed, make a horizontal splice at the middle wind frame.
9. Do not use round pipes for sign supports.

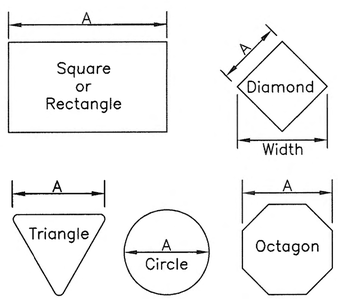

Maximum size unframed signs using 0.125" thick aluminum sheeting.	
Sign Shape	A
Squares, Shields, and Route Markers	48"
Rectangles	48"
Diamonds	48"
Triangles	48"
Rounds and Octagons	48"

Install wind framing on all signs that exceed the dimensions listed.

LIGHT SIGNS

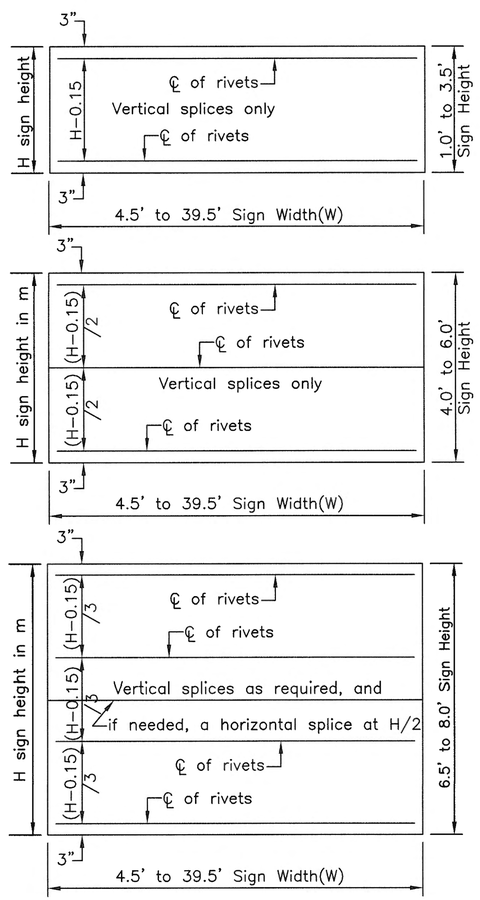

WIND FRAMING LOCATIONS

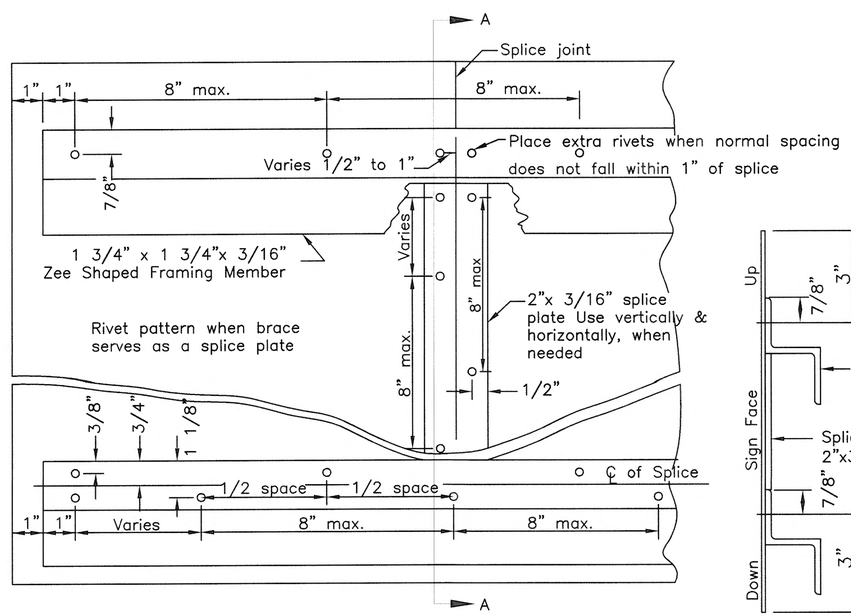

RIVET DETAIL FOR ZEE SHAPED WIND FRAMING & SPLICE PLATE

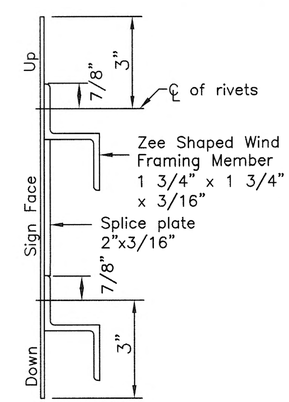

SECTION A–A

REVISIONS		
Date	Description	By
4/28/10	Delete pipe, rev notes	KJS

Sheet 1 of 1

State of Alaska
Department of Transportation
& Public Facilities

SIGN FRAMING AND POST SPACING

APPROVED

Date 5/31/12

S–00.11

HMF 3.18.20

S-01.00

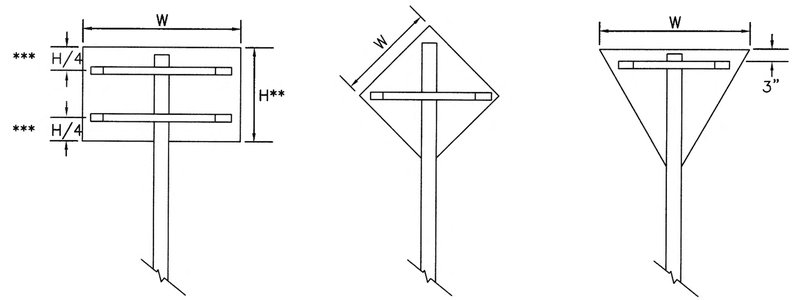

*** Use one brace when H ≤ 18"
Use two braces when 18"< H < 48"
Use three braces when H ≥ 48"

** Position of brace may be varied to match Predrilled mounting holes in panel

SIGN BRACING PLACEMENT

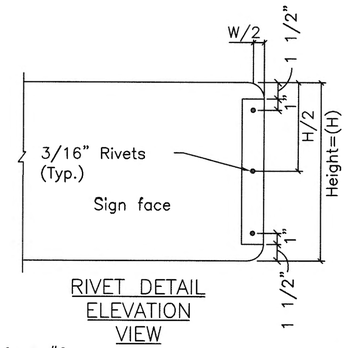

RIVET DETAIL
ELEVATION
VIEW

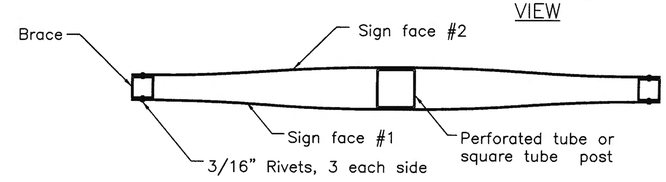

PLAN VIEW

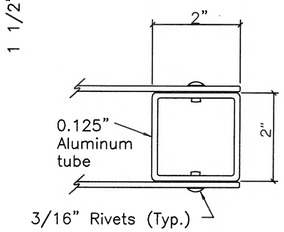

END BRACE DETAIL

SMALL STREET NAME SIGN (D3-1, D3-1A, D3-1D) BRACING DETAILS

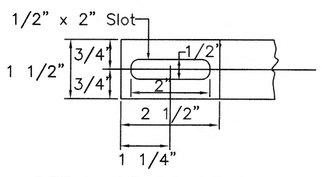

DETAIL OF BRACE SLOT
Elevation view

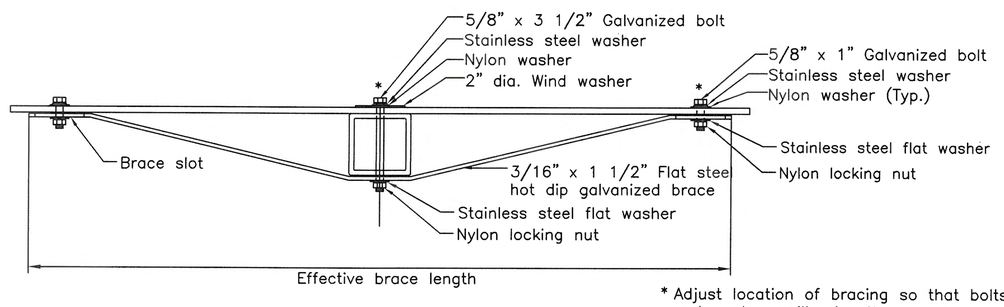

* Adjust location of bracing so that bolts and washers will miss the sign legend

TUBE POST SIGN BRACING
Plan view

SIGN WIDTH(W)	EFFECTIVE BRACE LENGTH		
	WARNING	YIELD	OTHER
30"	36"	24"	24"
36"	42"	30"	30"
42"	48"	–	36"
48"	TWO POSTS	36"	42"

< 30" No bracing required and use square tube

REVISIONS		
Date	Description	By

Sheet 1 of 1

State of Alaska
Department of Transportation
& Public Facilities

BRACING FOR SIGNS
MOUNTED ON SINGLE POST

APPROVED

Kurtis J. Smith
CE-7347

Timothy G. Miller
CE-8649

Date 2/28/03

S-01.00

HMF 3/8/20

S-05.01

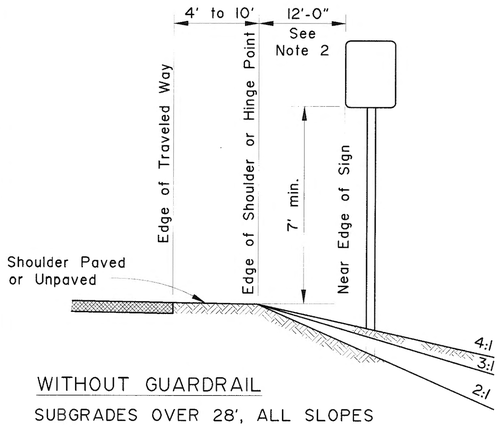

WITHOUT GUARDRAIL

SUBGRADES OVER 28', ALL SLOPES

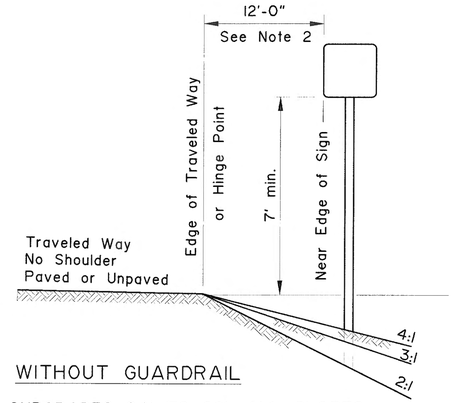

WITHOUT GUARDRAIL

SUBGRADES 24' TO 28', ALL SLOPES

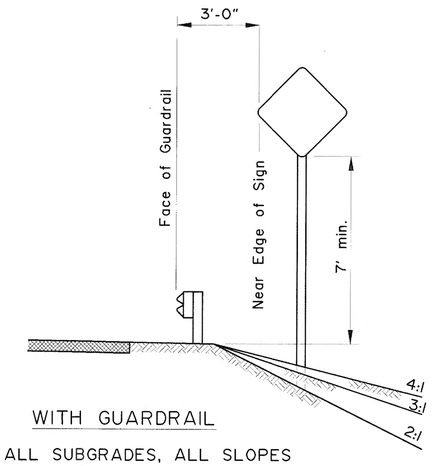

WITH GUARDRAIL

ALL SUBGRADES, ALL SLOPES

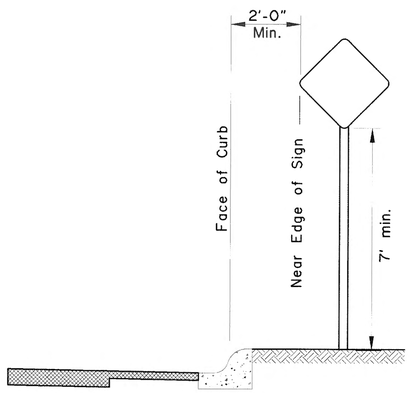

CURB WITHOUT SIDEWALK

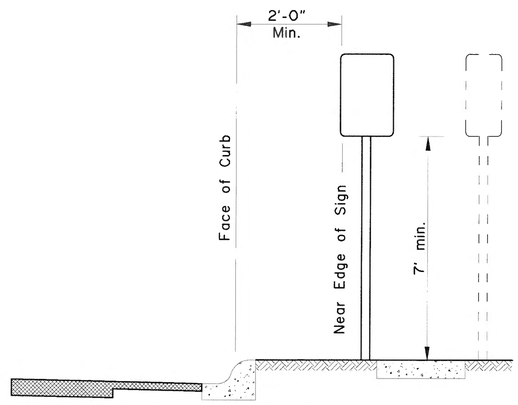

CURB WITH PARKWAY AND SIDEWALK

(If R/W width permits, signs should be placed behind sidewalk.)

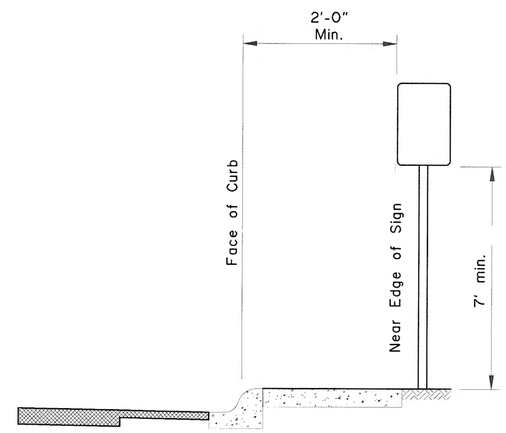

CURB WITH SIDEWALK WITHOUT PARKWAY

GENERAL NOTES

1. Unless shown otherwise on the plans, the standard sign offset is 12'. The minimum is 6'.
2. If signs extend over sidewalks, the minimum vertical clearance is 7'-0".
3. Add 6" to mounting height on unpaved roads.
4. If signs extend over bike paths, the minimum vertical clearance is 8' 0".
5. When signs are placed 30' or more from the edge of traveled way, mount them with the bottom of the sign at least 5' above the road surface at the near edge of the road.
6. When multiple hinged sign supports are used, mount hinges at least 7' above the ground.

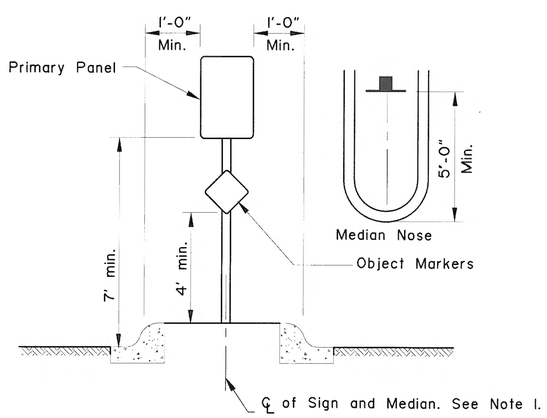

RAISED MEDIANS

Minimum 4' Width for Signing

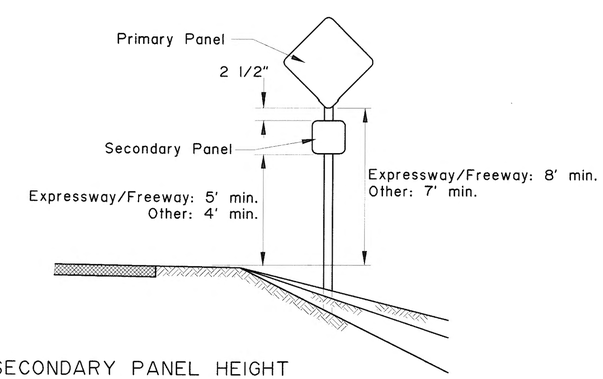

SECONDARY PANEL HEIGHT

ALL TWO PANEL MOUNTING

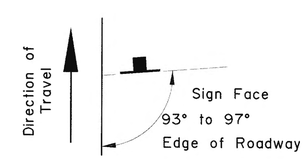

SIGN POSITIONING

REVISIONS		
Date	Description	By
4/3/01	Revised Sign Heights	KJS

Sheet 1 of 1

State of Alaska
Department of Transportation
& Public Facilities

POST MOUNTED SIGN
OFFSET AND HEIGHT

APPROVED

Date 7/15/82

S-05.01

HMF 3.18.20

S-20.10

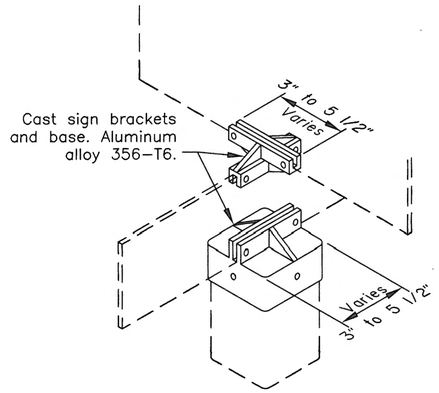

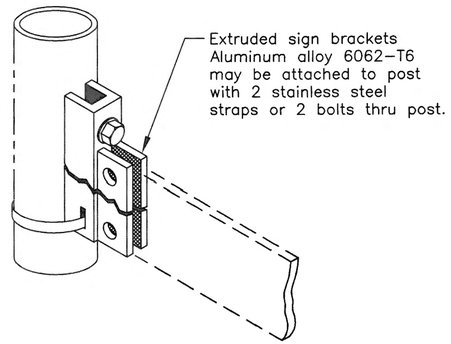

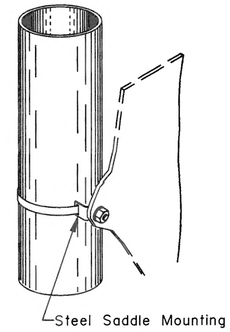

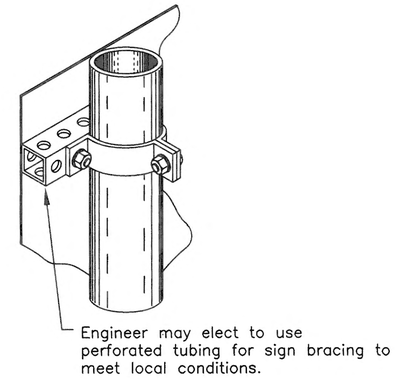

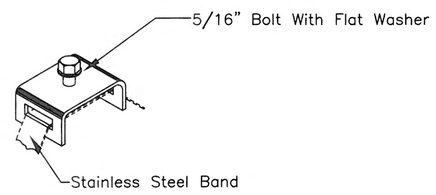

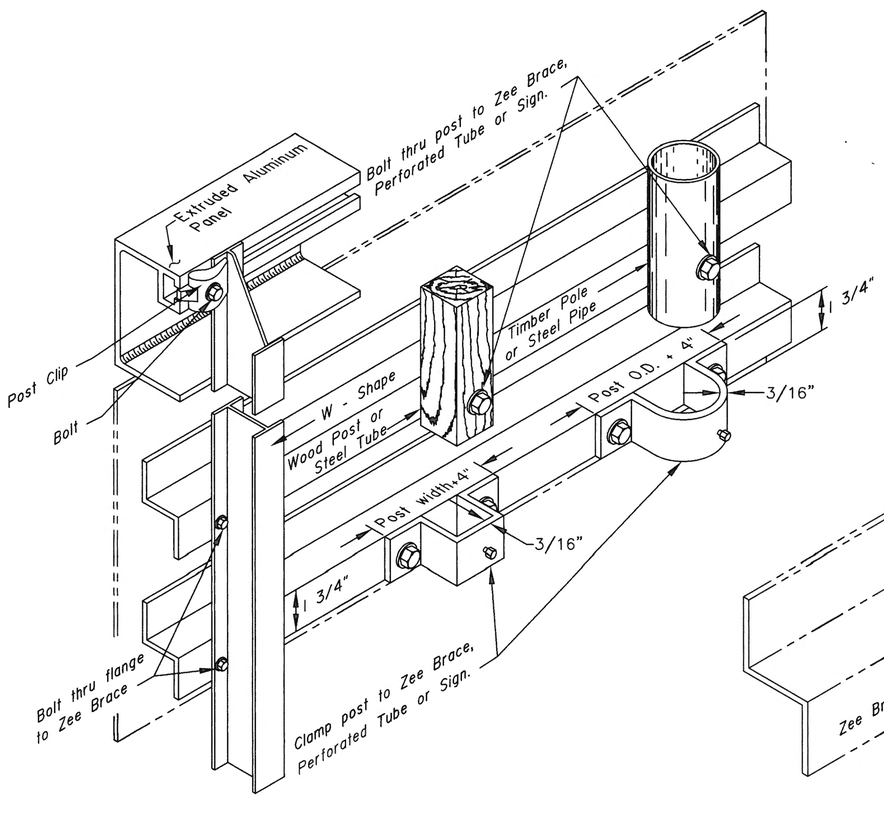

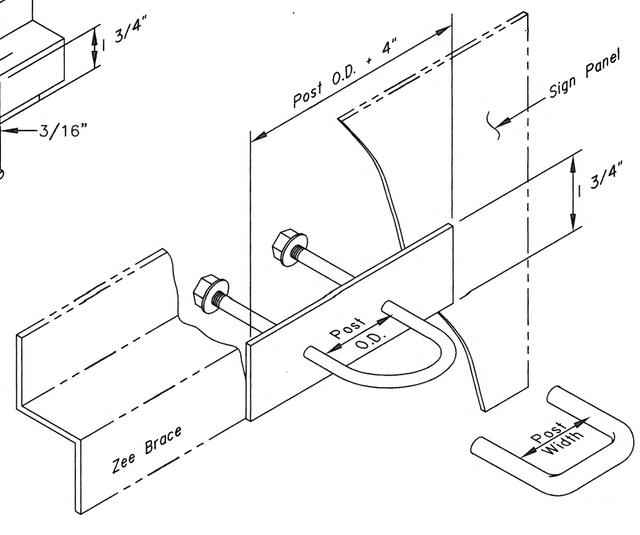

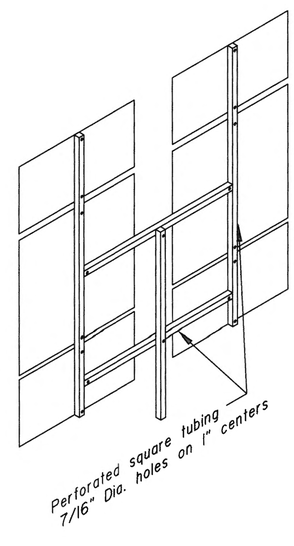

GENERAL NOTES

1. Details shown indicate general design only. Dimensions and design may vary among the manufacturers.
2. Install weather tight caps on all pipe and tube post (except perforated tubing).
3. Protect sign posts installed using driving methods with drive caps during installation.
4. Bolt braces to posts at each point where they cross posts.
5. Install signs with top of post, mounting brackets, etc. with a minimum of 3" below top of sign.
6. Paint all sign mounting fasteners on sign face a color closely matching the sign face.
7. Attach all signs, zees and braces mounted to the posts with 5/16" bolts.
8. Furnish all aluminum nuts, bolts and washers with anodized finish.

FASTENER SPECIFICATION TABLE

FASTENERS		ALUMINUM	STEEL	STAINLESS STEEL
BOLTS	MACHINE CARRIAGE "U"	2024-T4	A-307	A-276
NUTS	REGULAR	6061-T6	A-307	A-276
	LOCK	2017-T4		
WASHERS		2024-T4	A-36	A-276
POST CLIP		356-T6		

REVISIONS

Date	Description	By

Sheet 1 of 1

State of Alaska
Department of Transportation
& Public Facilities

SIGN TO SIGN POST CONNECTIONS

APPROVED

Date 2/28/03

S-20.10